SHRP-P-395

SHRP-LTPP Specific Pavement Studies: Five-Year Report

Amir N. Hanna
Transportation Research Board

With contributions by

Shiraz D. Tayabji
Transportation Technologies USA, Inc.
and
John S. Miller
PCS/Law Engineering

Strategic Highway Research Program
National Research Council
Washington, DC 1994

SHRP-P-395
ISBN 0-309-05772-8
Product No.: 5000

Program Manager: *Neil F. Hawks*
Project Manager: *Amir N. Hanna*
Five-Year Report Production Manager: *A. Robert Raab*
Program Area Secretary: *Cynthia Baker, Francine A. Burgess*
Production Editor: *Michael Jahr*

April 1994

key words:
asphalt concrete pavement
environmental effects
pavement design
pavement maintenance
pavement rehabilitation
portland cement concrete pavement
specific pavement studies (sps)

Strategic Highway Research Program
National Research Council
2101 Constitution Avenue N.W.
Washington, DC 20418

(202) 334-3774

The publication of this report does not necessarily indicate approval or endorsement of the findings, opinions, conclusions, or recommendations either inferred or specifically expressed herein by the National Academy of Sciences, the United States Government, or the American Association of State Highway and Transportation Officials or its member states.

© 1994 National Academy of Sciences

1.5M/NAP/494

Acknowledgments

The research described herein was supported by the Strategic Highway Research Program (SHRP). SHRP is a unit of the National Research Council that was authorized by section 128 of the Surface Transportation and Uniform Relocation Assistance Act of 1987.

Contents

Acknowledgments iii

Abstract 1

Executive Summary 3

1 Introduction and Background 5
- Introduction 5
- Background and Study Topics 5
- Objectives 7

2 Experiment Design 9
- Structural Factors for Flexible Pavements 13
- Structural Factors for Rigid Pavements 13
- Preventive Maintenance Effectiveness of Flexible Pavements 16
- Preventive Maintenance Effectiveness of Rigid Pavements 20
- Rehabilitation of Asphalt Concrete Pavements 20
- Rehabilitation of Jointed Portland Cement Concrete Pavements 24
- Bonded Concrete Overlays of Concrete Pavements 24
- Environmental Effects in the Absence of Heavy Loads 26
- Asphalt-Aggregate Mixture Specifications 26

3 Project and Participation Requirements 31
- Project Requirements 31
- Participation Requirements 33
- Test Site Requirements 34

4 Project Recruitment and Approval Process 37
- Project Solicitation and Nomination 37
- Project Verification 42
- Project Approval 43

5 Construction Guidelines 45
- Structural Factors for Flexible Pavements 46
  - Preparation and Compaction of Subgrade 46
  - Dense-Graded Aggregate Base 47
  - Asphalt-Treated Base 47

Drained Base Structure 49
Asphalt Concrete Mix Design and Materials 51
Other Considerations 53
Typical Cross Sections 53
Structural Factors for Rigid Pavements 57
Preparation and Compaction of Subgrade 57
Dense-Graded Aggregate Base 58
Lean Concrete Base 58
Drained Base Structure 59
Portland Cement Concrete and Other Materials 59
Concrete Pavement Construction Operations 60
Other Considerations 62
Typical Cross Sections 62
Preventive Maintenance Effectiveness of Flexible Pavements 65
Pavement Preparation and Maintenance Treatments 65
Crack Sealing 65
Chip Seals 65
Slurry Seals 66
Thin Overlays 66
Other Considerations 66
Preventive Maintenance Effectiveness of Rigid Pavements 66
Pavement Preparation Prior to Maintenance Treatments 67
Joint and Crack Sealing 67
Undersealing 67
Other Considerations 68
Rehabilitation of Asphalt Concrete Pavements 68
Maintenance of Control Section 68
Pavement Preparation Prior to Overlay 68
Minimal Preparation 69
Intensive Preparation 69
Asphalt Concrete Overlay 70
Other Considerations 71
Typical Cross Sections 72
Rehabilitation of Jointed Portland Cement Concrete Pavements 73
Pavement Preparation and Restoration 78
Maintenance of Control Section 78
Restoration Details 78
Joint and Crack Sealing 80
Partial-Depth Patching 80
Full-Depth Patching 81
Load Transfer Restoration 81
Full Surface Diamond Grinding 84
Undersealing 84
Subdrainage 85
Crack/Break and Seat 85
Asphalt Concrete Overlay 86
Saw and Seal 86

Other Considerations 87
Typical Cross Sections 87
Bonded Concrete Overlays of Concrete Pavements 94
Pavement Restoration Prior to Overlay 94
Maintenance of Control Section 94
Pre-Overlay Repair of Existing Pavement 94
Partial- and Full-Depth Patching 95
Reflective Crack Control 95
Joint Treatment 95
Load Transfer Restoration 95
Undersealing 98
Edge Drain Installation 98
Preparation of Existing Pavement Surface 98
Surface Removal by Cold Milling 98
Surface Removal by Shotblasting 98
Secondary Surface Cleaning 99
Final Cleaning 99
Portland Cement Concrete 99
Overlay Construction Operations 99
Other Considerations 101
Typical Cross Sections 101
Environmental Effects in the Absence of Heavy Loads 104
Preparation and Compaction of Subgrade 104
Base Layer 104
Asphalt Concrete Mix Design and Construction 104
Portland Cement Concrete Mix Design, Materials, and Construction 104
Other Considerations 105
Typical Cross Sections 105
Validation of SHRP Asphalt Specifications and Mix Design 105
Construction Operations 108
New Construction and Reconstruction 109
Rehabilitation of Existing Pavements 111
Asphalt Concrete Mix Design 112

6 Data Collection 115
Inventory and Construction Data 115
Materials and Laboratory Test Data 116
Traffic Data 117
Distress Data 118
Profile Data 118
Deflection Data 118
Friction Data 119
Climatic Data 119
Maintenance Data 119
Rehabilitation Data 119

7 Plans and Recommendations for Pavement Instrumentation 121
Introduction 121
Instrumentation Plan for the Experiment on Structural Factors for Flexible Pavements 122
Subgrade Instrumentation 123
Instrumentation of Dense-Graded Aggregate Base 124
Instrumentation of Asphalt-Treated Base 124
Instrumentation of Asphalt Concrete Surface 125
Instrumentation Plan for the Experiment on Structural Factors for Rigid Pavements 125
Subgrade Instrumentation 126
Instrumentation of Dense-Graded Aggregate Base 126
Instrumentation of the Portland Cement Concrete Surface 126
Instrumentation for the Experiment on Environmental Effects 127
Measurement Parameters and Sensors 127
Instrumentation Scheme and Plan 130

8 Status of Test Sites 131
Experiment on Structural Factors for Flexible Pavements 131
Experiment on Structural Factors for Rigid Pavements 133
Experiment on Maintenance Treatment of Flexible Pavements 133
Experiment on Maintenance Treatment of Rigid Pavements 133
Experiment on Rehabilitation of Asphalt Concrete Pavements 133
Experiment on Rehabilitation of Jointed Portland Cement Concrete Pavements 138
Experiment on Bonded Concrete Overlays 138
Experiment on Environmental Effects 138
Experiment on Asphalt-Aggregate Mixture Specifications 142
Status Summary 142

9 Key Products and Benefits 145
Introduction 145
General Products 145
Specific Products 146
Structural Factors for Flexible Pavements 146
Structural Factors for Rigid Pavements 147
Preventive Maintenance of Flexible Pavements 147
Preventive Maintenance of Rigid Pavements 147
Rehabilitation of Asphalt Concrete Pavements 148
Rehabilitation of Jointed Portland Cement Concrete Pavements 148
Bonded Concrete Overlays 149
Environmental Effects 149
Asphalt-Aggregate Mixture Specifications 149
Other Products 150
Benefits and Impact on Pavement Practices 151

10 Summary 153

References 159

Bibliography 161

List of Figures

Figure 1 Experiment design process 11

Figure 2 Schematic layout of a test site 12

Figure 3 Climatic regions 13

Figure 4 Project recruitment and approval process 38

Figure 5 Location of elevation measurements 48

Figure 6 Transverse interceptor drain 50

Figure 7 Edge drain detail 52

Figure 8 A test section without drainage provisions 54

Figure 9 A test section with a granular base and drainage provisions 55

Figure 10 A test section with an asphalt concrete base and drainage provisions 56

Figure 11 A test section without drainage provisions 63

Figure 12 A test section with a widened lane and drainage provisions 64

Figure 13 Example of pavement layers for a candidate project 73

Figure 14 Illustration of minimal preparation and 2-inch overlay 74

Figure 15 Illustration of minimal preparation and 5-inch overlay 75

Figure 16 Illustration of intensive preparation by milling and overlay 76

Figure 17 Shoulder joint detail 77

Figure 18 Full-depth patch detail 82

Figure 19 Joint load transfer restoration 83

Figure 20 A test section prior to rehabilitation 88

Figure 21 A test section rehabilitated with minimal restoration and no overlay 89

Figure 22 A test section rehabilitated with minimal restoration and an overlay 90

Figure 23 A test section rehabilitated with intensive restoration and no overlay 91

Figure 24 A test section rehabilitated with intensive restoration and an overlay 92

Figure 25 A test section rehabilitated with minimal restoration and an overlay with sawed and sealed joints 93

Figure 26 Detail of reflective crack control 96

Figure 27 Profile of cross-stitching repair 97

Figure 28 Illustration of a concrete pavement prior to overlay 102

Figure 29 Illustration of a bonded concrete overlay on a concrete pavement 103

Figure 30 Cross sections of the flexible pavement test sections 106

Figure 31 Cross sections of the rigid pavement test sections 107

List of Tables

Table 1 Temperature-moisture combinations for the experiment on asphalt-aggregate mixture specifications 10

Table 2 Study parameters for the experiment on structural factors for flexible pavements 15

Table 3 Study parameters for the experiment on structural factors for doweled jointed plain concrete pavements 17

Table 4 Study parameters for the experiment on structural factors for undoweled plain concrete pavements 18

Table 5 Study parameters for the experiment on structural factors for jointed reinforced concrete pavements 19

Table 6 Study parameters for the experiment on preventive maintenance effectiveness of flexible pavements 21

Table 7 Study parameters for the experiment on preventive maintenance effectiveness of rigid pavements 22

Table 8 Study parameters for the experiment on rehabilitation of asphalt concrete pavements 23

Table 9 Study parameters for the experiment on rehabilitation of jointed portland cement concrete pavements 25

Table 10 Study parameters for the experiment on bonded concrete overlays 27

Table 11 Study parameters for the experiment on environmental effects 28

Table 12 Study climates for the experiment on asphalt-aggregate mixture specifications 30

Table 13 Number of test sites required 36

Table 14 Sample nomination forms 39

Table 15 Restoration and overlay requirements 79

Table 16 Measurement parameters 129

Table 17 Status of the experiment on structural factors for flexible pavements 132

Table 18 Status of the experiment on structural factors for rigid pavements 134

Table 19 Status of the experiment on preventive maintenance effectiveness for flexible pavements 135

Table 20 Status of the experiment on preventive maintenance effectiveness for rigid pavements 136

Table 21 Status of the experiment on rehabilitation of flexible pavements 137

Table 22 Status of the experiment on rehabilitation of jointed portland cement concrete pavements 139

Table 23 Status of the experiment on bonded concrete overlays 140

Table 24 Status of the experiment on environmental effects 141

Table 25 Status of SPS test sites 143

Table 26 Study parameters for Specific Pavement Studies 154

Abstract

Although pavements have been built and maintained in North America for more than 100 years, and although road tests and laboratory analyses have improved the design and performance of pavements, much remains to be learned. The General Pavement Studies (GPS) portion of the Strategic Highway Research Program's Long-Term Pavement Performance program will provide much of the needed information. GPS will not, however, provide all the comparisons and parameters needed to study the effects of certain important factors on pavement performance. The Specific Pavement Studies (SPS) include specially constructed pavements that will help develop better understanding of the effects on performance of a few targeted factors not widely covered in GPS and explore options for construction of new pavements, the application of maintenance treatments to existing pavements, and the rehabilitation of distressed pavements. This report summarizes the status of SPS as of June 30, 1992.

SI Conversion Factors

SI* (MODERN METRIC) CONVERSION FACTORS

APPROXIMATE CONVERSIONS TO SI UNITS

Symbol	When You Know	Multiply By	To Find	Symbol
		LENGTH		
in	inches	25.4	millimeters	mm
ft	feet	0.305	meters	m
yd	yards	0.914	meters	m
mi	miles	1.61	kilometers	km
		AREA		
in^2	square inches	645.2	square millimeters	mm^2
ft^2	square feet	0.093	square meters	m^2
yd^2	square yards	0.836	square meters	m^2
ac	acres	0.405	hectares	ha
mi^2	square miles	2.59	square kilometers	km^2
		VOLUME		
fl oz	fluid ounces	29.57	milliliters	ml
gal	gallons	3.785	liters	l
ft^3	cubic feet	0.028	cubic meters	m^3
yd^3	cubic yards	0.765	cubic meters	m^3
NOTE: Volumes greater than 1000 l shall be shown in m^3.				
		MASS		
oz	ounces	28.35	grams	g
lb	pounds	0.454	kilograms	kg
T	short tons (2000 lb)	0.907	megagrams	Mg
		TEMPERATURE (exact)		
°F	Fahrenheit temperature	5(F-32)/9 or (F-32)/1.8	Celcius temperature	°C
		ILLUMINATION		
fc	foot-candles	10.76	lux	l
fl	foot-Lamberts	3.426	candela/m^2	cd/m^2
		FORCE and PRESSURE or STRESS		
lbf	poundforce	4.45	newtons	N
psi	poundforce per square inch	6.89	kilopascals	kPa

APPROXIMATE CONVERSIONS FROM SI UNITS

Symbol	When You Know	Multiply By	To Find	Symbol
		LENGTH		
mm	millimeters	0.039	inches	in
m	meters	3.28	feet	ft
m	meters	1.09	yards	yd
km	kilometers	0.621	miles	mi
		AREA		
mm^2	square millimeters	0.0016	square inches	in^2
m^2	square meters	10.764	square feet	ft^2
m^2	square meters	1.195	square yards	ac
ha	hectares	2.47	acres	mi^2
km^2	square kilometers	0.386	square miles	
		VOLUME		
ml	milliliters	0.034	fluid ounces	fl oz
l	liters	0.264	gallons	gal
m^3	cubic meters	35.71	cubic feet	ft^3
m^3	cubic meters	1.307	cubic yards	yd^3
		MASS		
g	grams	0.035	ounces	oz
kg	kilograms	2.202	pounds	lb
Mg	megagrams	1.103	short tons (2000 lb)	T
		TEMPERATURE (exact)		
°C	Celcius temperature	1.8C + 32	Fahrenheit temperature	°F
		ILLUMINATION		
lx	lux	0.0929	foot-candles	fc
cd/m^2	candela/m^2	0.2919	foot-Lamberts	fl
		FORCE and PRESSURE or STRESS		
N	newtons	0.225	poundforce	lbf
kPa	kilopascals	0.145	poundforce per square inch	psi

* SI is the symbol for the International System of Units. Appropriate rounding should be made to comply with Section 4 of ASTM E380.

(Revised August 1992)

Executive Summary

The Long-Term Pavement Performance (LTPP) studies of the Strategic Highway Research Program (SHRP) address the need for improved technology for pavement design, construction, maintenance, and rehabilitation. The LTPP experiments are classified into two groups: General Pavement Studies (GPS) and Specific Pavement Studies (SPS). While the GPS program focuses on existing pavements, covering the most commonly used pavement types in the United States and Canada, the SPS program includes specially constructed pavements that will help develop a better understanding of the effects on performance of a few targeted factors not widely covered in the GPS. Through the construction and evaluation of the specially constructed test sections, the SPS program explores options for construction of new pavements, the application of maintenance treatments to the existing pavements, and the rehabilitation of distressed pavements.

The SPS program includes nine experiments, designated SPS-1 through SPS-9, that address the effects of structural factors, maintenance treatments, rehabilitation alternatives, environmental effects, and asphalt concrete mixtures on pavement performance:

- SPS-1: Strategic Study of Structural Factors for Flexible Pavements
- SPS-2: Strategic Study of Structural Factors for Rigid Pavements
- SPS-3: Preventive Maintenance Effectiveness of Flexible Pavements
- SPS-4: Preventive Maintenance Effectiveness of Rigid Pavements
- SPS-5: Rehabilitation of Asphalt Concrete Pavements
- SPS-6: Rehabilitation of Jointed Portland Cement Concrete Pavements
- SPS-7: Bonded Concrete Overlays of Concrete Pavements
- SPS-8: Study of Environmental Effects in the Absence of Heavy Loads
- SPS-9: Validation of SHRP Asphalt Specifications and Mix Design and Innovations in Asphalt Pavements

To ensure practical and implementable experiments, the experimental design and construction guidelines for these experiments were developed in cooperation with state and provincial highway agencies. To help evaluate the performance of the pavement structures constructed as part of the SPS program, a comprehensive data collection plan has been developed for each experiment. This plan provides detailed procedures for collection of information on pavement structure and materials; traffic type and volume; climate; pavement performance as measured by deflection, distress, profile, and friction; and applied maintenance and rehabilitation. As monitoring of the test sites is expected to continue for 15 to 20 years, the frequency of data collection has been addressed.

The SPS experiments within the LTPP program will include nearly 100 test sites with almost 1000 test sections. As these sections are monitored from their infancy, a comprehensive database will provide complete information on the construction, materials, traffic environment, performance, and other features of these sections. This information will contribute to the development of many usable products, such as methodologies for selecting the optimum combinations of design features for new construction or other optimum rehabilitation options for distressed pavements. Also, products such as test methods and material evaluation will result from these experiments. The implementation of the SPS program will contribute to changes in pavement design and construction practices that will improve pavement performance and utilization of resources.

1

Introduction and Background

Introduction

The Long-Term Pavement Performance (LTPP) studies of the Strategic Highway Research Program (SHRP) address the need for improved technology for pavement design, construction, maintenance, and rehabilitation. The LTPP experiments are classified into two groups: General Pavement Studies (GPS) and Specific Pavement Studies (SPS). The GPS program focuses on existing pavements. The designs under study are those most commonly used in the United States and Canada. The individual test sites have been selected to provide a wide range of values for the key study variables and significant covariants. The SPS program, like the GPS program, involves studies of in-service pavements with varied design factors and site conditions. However, as the existing pavements included in the GPS do not provide all the comparisons and parameters needed to study the effects of certain important factors on pavement performance, the SPS include specially constructed pavements that will help develop a better understanding of the effects on performance of a few targeted factors not widely covered in the GPS. Through the construction and evaluation of the specially constructed test sections, the SPS program explores options for construction of new pavements, the application of maintenance treatments to the existing pavements, and the rehabilitation of distressed pavements. This program will yield needed information about the cost-effectiveness of specific design factors.

Background and Study Topics

During the course of SHRP's research design, 18 initial SPS topics were proposed and documented in *Strategic Highway Research Program Research Plans*[1]. Eight of the proposed study topics related to the different aspects of flexible pavements and 10 study topics related to rigid pavements. Proposed specific studies for flexible pavements included the following topics:

- Preventive maintenance.
- Subdrainage.
- Hot recycling.
- Asphalt concrete overlays on pretreated jointed concrete pavements.
- Environmental distress.
- Cold recycling.

- Low-volume roads.
- Load equivalence factors.

Proposed specific studies for rigid pavements included the following topics:

- Preventive maintenance.
- Jointed concrete pavement restoration.
- Subsurface drainage.
- High-strength concrete.
- Nonerodible, high-strength subbases.
- Shoulder design.
- Environmental distress.
- Continuously reinforced concrete overlays.
- Retrofit tied concrete shoulders.
- Load equivalence factors.

Over the last several years, SHRP's advisory groups and highway agencies have selected the highest priority features, those where improvement potential appears most significant or where current practices are most unreliable. Through this process eight experiments, designated SPS-1 through SPS-8, have emerged as top priorities. In addition, a ninth experiment, designated SPS-9, has been introduced to further validate the performance-based asphalt and asphalt aggregate mixture specifications developed as part of the SHRP asphalt research program. These experiments are grouped into five categories as follows:

1. Structural Factors

   SPS-1: Strategic Study of Structural Factors for Flexible Pavements
   SPS-2: Strategic Study of Structural Factors for Rigid Pavements

2. Pavement Maintenance

   SPS-3: Preventive Maintenance Effectiveness of Flexible Pavements
   SPS-4: Preventive Maintenance Effectiveness of Rigid Pavements

3. Pavement Rehabilitation

   SPS-5: Rehabilitation of Asphalt Concrete Pavements
   SPS-6: Rehabilitation of Jointed Portland Cement Concrete Pavements
   SPS-7: Bonded Portland Cement Concrete Overlays of Concrete Pavements

4. Environmental Effects

   SPS-8: Study of Environmental Effects in the Absence of Heavy Loads

5. Asphalt-Aggregate Mixture Specifications

SPS-9: Validation of SHRP Asphalt Specifications and Mix Design and Innovations in Asphalt Pavements

The studies on structural factors (SPS-1 and SPS-2), pavement rehabilitation (SPS-5, SPS-6, and SPS-7), and environmental effects (SPS-8) are part of the LTPP program, while the studies on preventive maintenance effectiveness (SPS-3 and SPS-4) are part of the highway operations portion of the SHRP. The study on asphalt-aggregate mixture specifications (SPS-9) is part of the asphalt portion of the SHRP.

Objectives

The SPS will develop a comprehensive database of information on construction, materials, traffic, environment, performance, and other features pertaining to the test sections. This database will provide a reliable tool for accomplishing the objectives of the different experiments and will assist other researchers and highway agencies in extending the study findings to specific situations of local or regional interest.

The primary objective of the experiments on structural factors for flexible and rigid pavements is to more precisely determine the relative influence and long-term effectiveness of the strategic factors that influence the performance of pavements. Accomplishing this objective will provide substantially improved tools for use in design and construction of new and reconstructed pavements.

The objective of the experiments on preventive maintenance effectiveness of flexible and rigid pavements is to develop conclusions concerning the effectiveness of specific maintenance treatments and their contribution to pavement performance and service life. Accomplishing this objective will provide improved tools for use in maintenance management and life-cycle cost analysis activities.

The primary objective of the experiments on rehabilitation of asphalt concrete and jointed portland cement concrete pavements is to develop conclusions concerning the effectiveness of different rehabilitation techniques and strategies and their contribution to pavement performance and service life. Accomplishing this objective will provide improved tools for use in pavement management and life-cycle cost analysis activities. Similarly, the experiment on bonded concrete overlays will develop conclusions concerning the effectiveness of bonded concrete overlays in improving the serviceability and extending the service life of concrete pavements that are in need of structural and/or rideability improvements.

The objective of the experiment on environmental effects in the absence of heavy loads is to develop conclusions concerning environmentally induced serviceability loss and the contribution of environment and subgrade to distress of flexible and rigid pavements.

Accomplishing this objective will lead to improved environmental effects models that will enhance the design and construction of flexible and rigid pavements.

The primary objective of the experiment on asphalt-aggregate mix specifications is to evaluate the performance-based asphalt and asphalt-aggregate mixture specifications and innovations in asphalt pavement. Accomplishing this goal will lead to the development of asphalt-aggregate mixtures that are suited for the different climatic regions and will ensure improved performance and long service life.

Accomplishing the objectives of the SPS experiments will lead to improvements in the design procedures and standards for construction, maintenance, and rehabilitation of flexible and rigid pavements. These improvements will contribute to achieving the overall goal of the LTPP studies: increased pavement life and better utilization of resources.

2

Experiment Design

To ensure practical and implementable experiments, the experimental designs for the Specific Pavement Studies (SPS) experiments were developed in cooperation with state and provincial highway agencies and the Federal Highway Administration. This process involved the development by Strategic Highway Research Program (SHRP) technical assistance contractors of a preliminary experiment design based on the details contained in *Strategic Highway Research Program Research Plans*[1]. This preliminary plan was then reviewed by a working group consisting of representatives from SHRP technical assistance contractors, the Federal Highway Administration, two or three state highway agencies, and the SHRP. Based on the deliberations of the working group, SHRP technical assistance contractors prepared a draft experimental design. This experimental design was then presented in study workshops for review by representatives of state and provincial highway agencies, the Federal Highway Administration, and the pavement industry. Representatives of as many as 26 highway agencies participated in such study workshops. The results of this review were incorporated into the final experiment design. During the development of the experiment design, those SHRP advisory committees, expert task groups, and pavement industries dealing with the subject of the experiment were advised of the progress, and their comments were sought and considered in the final plans. This process is illustrated schematically in Figure 1.

Following this process, a detailed experiment has been developed for each study to include different levels of climate, subgrade soil, traffic, and factors pertaining to pavement type. Therefore, each SPS experiment requires a number of test sites located in each climatic region. Each test site contains a number of test sections that incorporate the different materials and details to be evaluated, as illustrated in Figure 2.

For the studies on structural factors, environmental effects, pavement rehabilitation, and maintenance (SPS-1 through SPS-8), the continental United States and Canada (Figure 3) have been divided into four climatic regions (wet-freeze, wet-no freeze, dry-freeze, and dry-no freeze). These climatic regions are similar to those used for the General Pavement Studies. For the study of asphalt-aggregate mixture specifications (SPS-9), the climatic regimes are defined by ranges of the highest average monthly temperature (high temperature), the annual minimum temperature (low temperature), and the annual precipitation. Although these factors could result in 64 possible temperature-moisture combinations, only 41 of these combinations are expected to occur within the United States and Canada. Table 1 illustrates the 41 possible combinations and the states and provinces in which these conditions would occur.

Table 1. Temperature-moisture combinations for the experiment on asphalt-aggregate mixture specifications.

Moisture		<10 inches				10 to 24 inches			
High Temperature		<80°F	80 to 89°F	90 to 100°F	>100°F	<80°F	80 to 90°F	90 to 100°F	<100°F
Low Temperature	<-30°F	AK,WY	MT,Alta,Sask	-	-	ID,CO,WY MN,Alta, Sask, Que	ND,SD,MN,MT, Sask,Man		-
	-30to-21°F	AK,WY	UT,CO,WY,MT, Alta,Sask	WY	-	ID,CO,MT, SD,Alta	ID,OR,NV,UT,NM, CO,WY,ND,SD,NE, MN,IA,Alta,Sask	OR,NV,UT,MT, SD,NE	-
	-20to10°F	AK	NV,UT	NV,UT,AZ,NM,CO, WY	-	WA,OR,ID, UT,AZ,NM, CO,WY,MT, Alta	WA,CA,NV,ID,UT, NM,TX,OK,CO,WY MT,SD,NE,IA	WA,ID,UT,AZ,TX OK,CO,NE,KS	-
	>-10°F	AK	CA,NV	CA,NV,UT,AZ,NM, TX	CA,NV,AZ	OR,CA,AZ	WA,OR,CA,NV,ID, NM,TX,HI	WA,CA,NV,AZ, NM,TX,OK,KS	CA,AZ, TX

Moisture		25 TO 40 inches				40 inches			
High Temperature		<80°F	80 to 89°F	90 to 100°F	>100°F	<80°F	80 to 90°F	90 to 100°F	<100°F
Low Temperature	<-30°F	ID,CO,WY MT,MN,NE, Man,Que,BC	ID,CO,MN	-	-	-	-	-	-
	-30to-21°F	UT,CO,MT, WI,MI,NY, VT,NH,ME, Alta,Ont, Que,BC	UT,MN,WI,IA,NY, NH,ME,Ont,Que	-	-	WA,ME,BC, Que,NB,NF	VT,NH,ME,Que	-	-
	-20to10°F	WA,OR,ID, NM,MT,WI, MI,NY,VT, NH	WA,OR,CA,ID,AZ, NM,WY,NE,WI,IA, MO,IL,MI,IN,OH, PA,WV,MD,NY	AZ,NM,NE,KS,IA, MO	-	OR,CA,PA, WV,NY,ME, WA,NB,PEI, NS,NF	OR,CA,PA,ND,NJ, NY,VT,NH,MA,CT, RI	-	-
	>-10°F	CA	WA,OR,CA,MO,IL, MI,IN,VA,OH,PA, WV,MD,NY	CA,TX,OK,KS,MO	-	WA,OR,CA, TN,VA,PA, WV,MA,CT, RI,BC,NF,NS	OR,CA,MD,AR,IL, IN,KY,TN,FL,GA, SC,NC,VA,OH,PA, WV,MD,DC,NJ,NY, CT,DE	PR,TX,OK,MO,AR, LA,IL,KY,TN,MS, AL,FL,GA,SC,NC	-

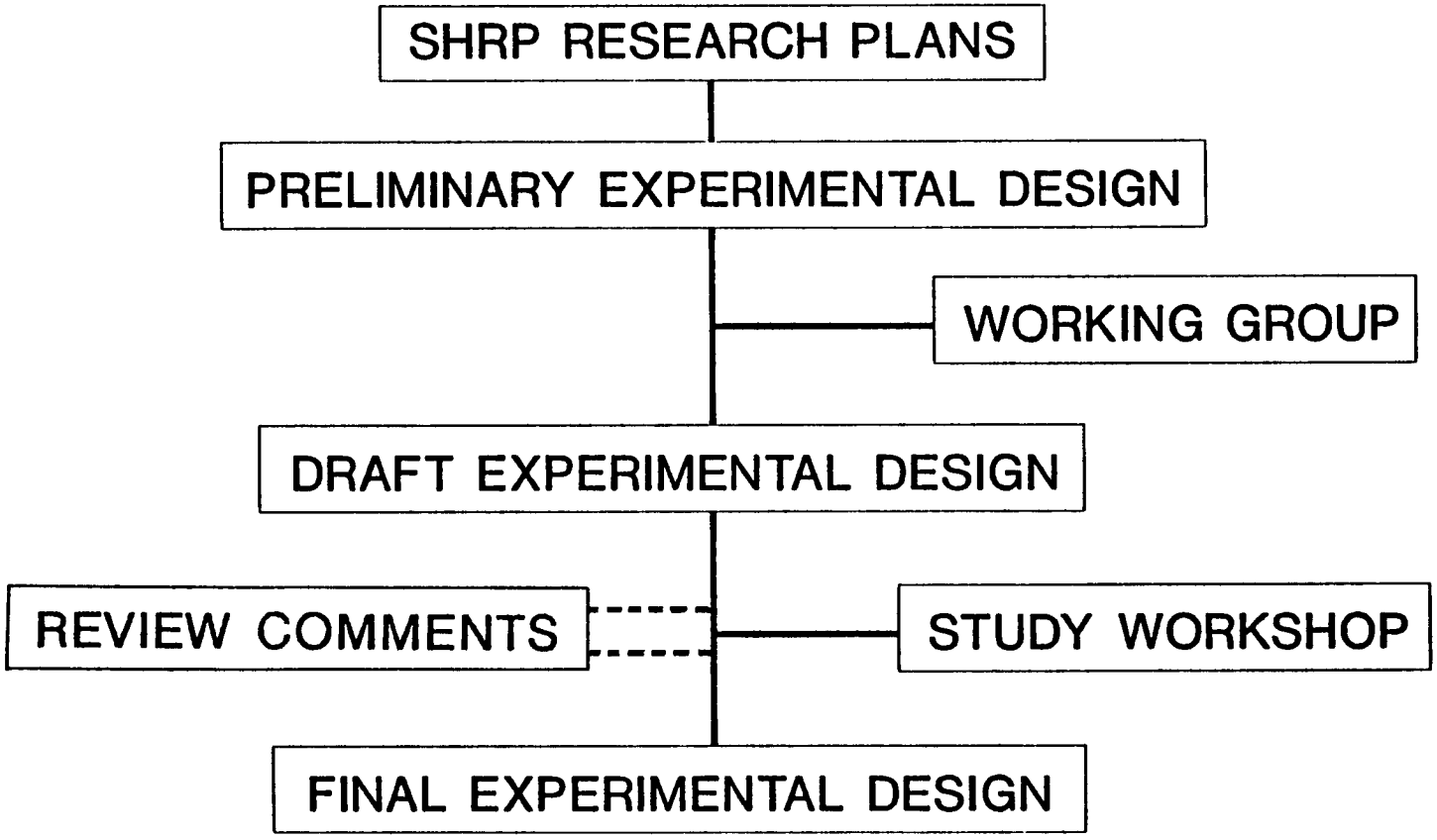

Figure 1. Experiment design process.

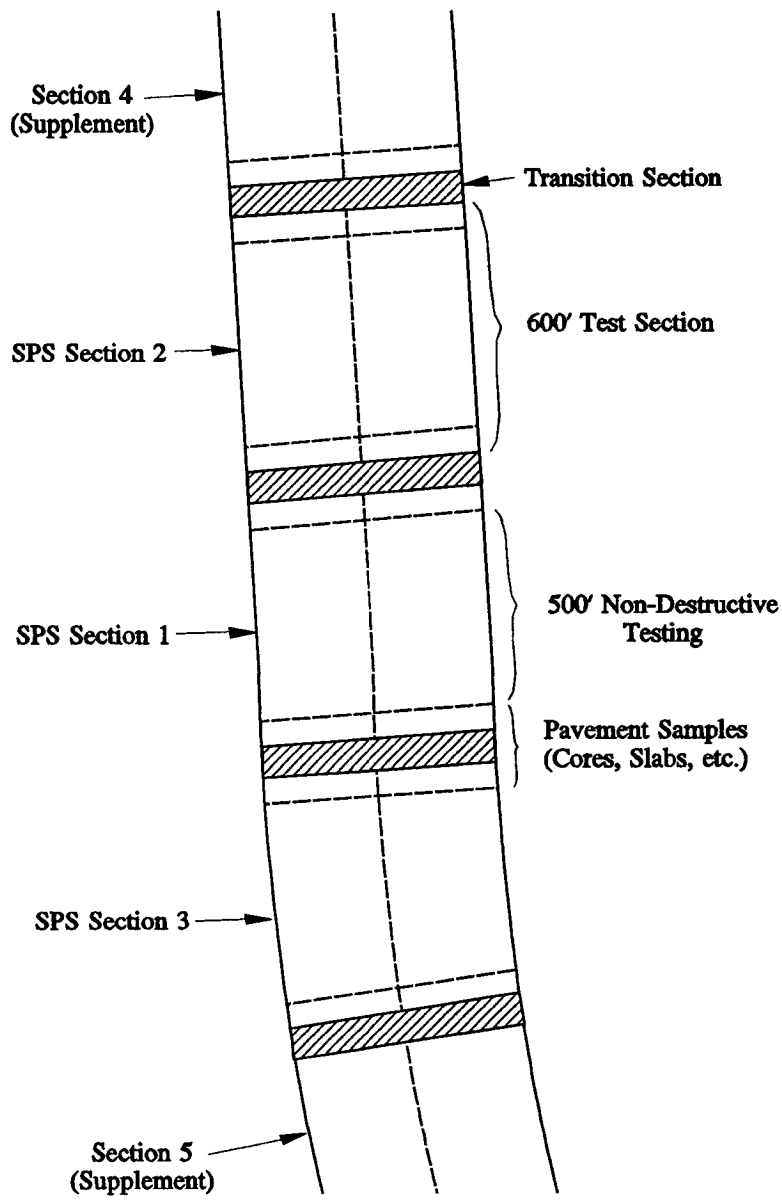

Figure 2. Schematic layout of a test site.

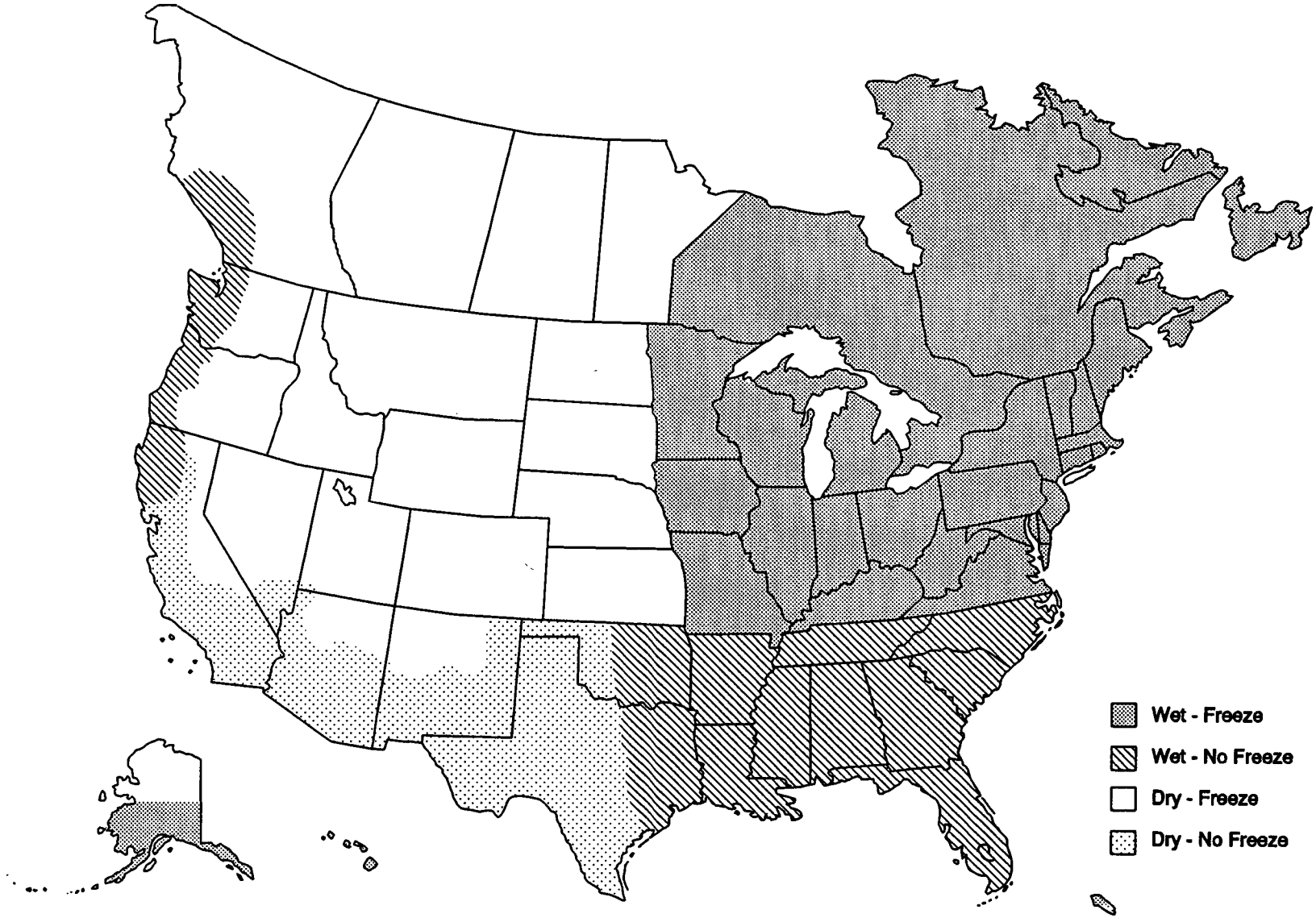

Figure 3. **Climatic regions.**

The SPS are designed as a series of coordinated national experiments. However, they offer the opportunity for adding test sections to investigate pavement designs or rehabilitation strategies of regional interest or to evaluate innovative ideas or features. Consequently, participating highway agencies have been encouraged to utilize this opportunity and SHRP has assisted in coordinating this activity.

Structural Factors for Flexible Pavements

The experiment on structural factors for flexible pavements (SPS-1) examines the effects of climatic region, subgrade soil (fine and coarse grained), and traffic rate (as a covariant) on pavement sections incorporating different levels of structural factors. These factors include drainage (presence or lack of it as provided by an open-graded permeable asphalt-treated drainage layer and edge drains), asphalt concrete surface thickness (4 and 7 inches), base type (dense-graded untreated aggregate, dense-graded asphalt-treated, and combinations thereof), and base thickness (8 and 12 inches for undrained sections and 8, 12, and 16 inches for drained sections). The experiment design stipulates a traffic loading level in the study lane in excess of 100,000 equivalent single axle loads (ESAL) per year.

The combinations of the study factors in this experiment result in 24 different pavement structures. The experiment, designed in a factorial manner to enhance implementation practicality, permits the construction of 12 test sections at 1 site with the complementary 12 test sections to be constructed at another site within the same climatic region on a similar subgrade type. Table 2 lists the experimental factors and the pavement structures that must be constructed at each site. The experiment includes 192 test sections located at 16 test sites. Four sites are to be constructed in each of the four climatic regions; 2 of the sites are to be constructed on a fine-grained subgrade and 2 on a coarse-grained subgrade.

Structural Factors for Rigid Pavements

The experiment on structural factors for rigid pavements (SPS-2) examines the effects of climatic region, subgrade soil (fine and coarse grained), and traffic rate (as a covariant) on doweled jointed plain concrete pavement sections incorporating different levels of structural factors. These factors include drainage (presence or lack of it as provided by an open-graded permeable asphalt-treated drainage layer and edge drains), concrete thickness (8 and 11 inches), base type (dense-graded untreated aggregate and lean concrete), concrete flexural strength (550 and 900 psi at 14 days), and lane width (12 and 14 feet). The experiment requires that all test sections be constructed with perpendicular joints spaced 15 feet apart and stipulates a traffic loading level in the study lane in excess of 200,000 ESAL/year.

The combinations of the study factors in this experiment result in 24 different pavement structures. As for the experiment on structural factors for flexible pavements, the experiment is designed in a fractional factorial manner to allow the construction of 12 test

Table 2. Study parameters for the experiment on structural factors for flexible pavements.

Pavement Structure Factors				Moisture, Temperature, and Subgrade Type															
				Wet								Dry							
				Freeze				No-Freeze				Freeze				No-Freeze			
Drainage	Base Type	Total Base Thickness, inches	Surface Thickness, inches	Fine		Coarse		Fine		Coarse		Fine		Coarse		Fine		Coarse	
				1	2	3	4	5	6	7	8	9	10	11	12	13	14	15	16
No	DGAB	8	4		X		X		X		X		X		X		X		X
			7	X		X		X		X		X		X		X		X	
		12	4	X		X		X		X		X		X		X		X	
			7		X		X		X		X		X		X		X		X
	ATB	8	4	X		X		X		X		X		X		X		X	
			7		X		X		X		X		X		X		X		X
		12	4		X		X		X		X		X		X		X		X
			7	X		X		X		X		X		X		X		X	
	ATB / 4" DGAB	8	4	X		X		X		X		X		X		X		X	
			7		X		X		X		X		X		X		X		X
		12	4		X		X		X		X		X		X		X		X
			7	X		X		X		X		X		X		X		X	
Yes	4" PATB / DGAB	8	4	X		X		X		X		X		X		X		X	
			7		X		X		X		X		X		X		X		X
		12	4		X		X		X		X		X		X		X		X
			7	X		X		X		X		X		X		X		X	
		16	4		X		X		X		X		X		X		X		X
			7	X		X		X		X		X		X		X		X	
	ATB / 4" PATB	8	4		X		X		X		X		X		X		X		X
			7	X		X		X		X		X		X		X		X	
		12	4	X		X		X		X		X		X		X		X	
			7		X		X		X		X		X		X		X		X
		16	4	X		X		X		X		X		X		X		X	
			7		X		X		X		X		X		X		X		X

Each X designates a test section.

DGAB = Dense-graded untreated aggregate base.
ATB = Dense-graded asphalt-treated base.
4" PATB = 4-inch thick open-graded permeable asphalt-treated drainage layer.
4" DGAB = 4-inch thick dense-graded untreated aggregate base layer beneath asphalt-treated base.

sections at each site. Table 3 lists the experimental factors and the pavement structures that must be constructed at each site. The experiment includes 192 test sections located at 16 sites. Four sites are to be located in each of the four climatic regions.

A supplementary experiment, designated SPS-2A, addresses undoweled plain concrete pavements with skewed joints. This experiment requires that all test sections be constructed with a variable 12-15-13-14-foot joint spacing and includes the same factor levels for drainage, base types, concrete thickness, and lane width covered in the main experiment but only one level of concrete flexural strength (550 psi). Twelve different pavement structures are required to address these factors. Six of these sections are to be constructed at one test site, with the complementary six sections to be constructed at another site. Table 4 lists the pavement structures that may be constructed at each site in addition to those sections required for the primary experiment.

Another supplementary experiment, designated SPS-2B, addresses jointed reinforced concrete pavements. This experiment requires that all test sections be constructed with doweled joints at 30-foot spacing. It includes the same factor levels for drainage, concrete thickness, concrete flexural strength, and lane width covered in the main experiment but only one level of base type (dense-graded untreated aggregate). Sixteen different pavement structures are required to address these factors. Eight of these sections are to be constructed at one test site, with the complementary eight sections to be constructed at another site. Table 5 lists the pavement structures that may be constructed at each site in addition to those sections required for the primary experiment.

A test site for the study of structural factors for rigid pavements must include at least the 12 test sections required for the primary experiment on doweled jointed plain concrete pavements. However, the test site may also include the six test sections required for the study of jointed plain concrete pavements with skewed joints and/or the eight test sections required for the study of jointed reinforced concrete pavements. Therefore, a test site may include 12, 18, 20, or 26 test sections.

Preventive Maintenance Effectiveness of Flexible Pavements

The experiment on preventive maintenance effectiveness of flexible pavements (SPS-3) examines the effects of climatic region, subgrade soil (fine and coarse grained), pavement condition (good, fair, and poor), and traffic rate and structural capacity (as covariants) on pavement sections incorporating different preventive maintenance treatments. These maintenance treatments include crack sealing, chip seals, slurry seals, and overlays.

For project classification purposes, traffic loading level in the study lane is classified as low (< 85,000 ESAL/year) or high (> 85,000 ESAL/year). Pavement structural capacity is classified in two levels depending on the ratio of the structural number for the existing pavement to that of the pavement designed for the estimated traffic rate. The structural capacity is classified as high if the structural number ratio is equal to or greater than 1.0 and is classified as low if the ratio is less than 1.0.

Table 3. Study parameters for the experiment on structural factors for doweled jointed plain concrete pavements.

Pavement Structure Factors					Moisture, Temperature, and Subgrade Type															
Drainage	Base Type	Portland Cement Concrete		Lane Width, feet	Wet								Dry							
					Freeze				No-Freeze				Freeze				No-Freeze			
		Thickness, Inches	Strength, psi		Fine		Coarse		Fine		Coarse		Fine		Coarse		Fine		Coarse	
					1	2	3	4	5	6	7	8	9	10	11	12	13	14	15	16
No	DGAB	8	550	12	X		X		X		X		X		X		X		X	
				14		X		X		X		X		X		X		X		X
			900	12		X		X		X		X		X		X		X		X
				14	X		X		X		X		X		X		X		X	
		11	550	12		X		X		X		X		X		X		X		X
				14	X		X		X		X		X		X		X		X	
			900	12	X		X		X		X		X		X		X		X	
				14		X		X		X		X		X		X		X		X
No	LCB	8	550	12	X		X		X		X		X		X		X		X	
				14		X		X		X		X		X		X		X		X
			900	12		X		X		X		X		X		X		X		X
				14	X		X		X		X		X		X		X		X	
		11	550	12		X		X		X		X		X		X		X		X
				14	X		X		X		X		X		X		X		X	
			900	12	X		X		X		X		X		X		X		X	
				14		X		X		X		X		X		X		X		X
Yes	PATB DGAB	8	550	12	X		X		X		X		X		X		X		X	
				14		X		X		X		X		X		X		X		X
			900	12		X		X		X		X		X		X		X		X
				14	X		X		X		X		X		X		X		X	
		11	550	12		X		X		X		X		X		X		X		X
				14	X		X		X		X		X		X		X		X	
			900	12	X		X		X		X		X		X		X		X	
				14		X		X		X		X		X		X		X		X

Each X designates a test section.

DGAB = Dense-graded untreated aggregate base.
LCB = Lean concrete base.
PATB/DGAB = 4-inch permeable asphalt-treated base on 4-inch untreated DGAB base.

Table 4. Study parameters for the experiment on structural factors for undoweled plain concrete pavements.

Pavement Structure Factors					Moisture, Temperature, and Subgrade Type															
Drainage	Base Type	Portland Cement Concrete		Lane Width, feet	Wet								Dry							
					Freeze				No-Freeze				Freeze				No-Freeze			
					Fine		Coarse		Fine		Coarse		Fine		Coarse		Fine		Coarse	
		Thickness, inches	Strength, psi		1	2	3	4	5	6	7	8	9	10	11	12	13	14	15	16
No	DGAB	8	550	12	X		X		X		X		X		X		X		X	
				14		X		X		X		X		X		X		X		X
		11	550	12		X		X		X		X		X		X		X		X
				14	X		X		X		X		X		X		X		X	
No	LCB	8	550	12		X		X		X		X		X		X		X		X
				14	X		X		X		X		X		X		X		X	
		11	550	12	X		X		X		X		X		X		X		X	
				14		X		X		X		X		X		X		X		X
Yes	PATB / DGAB	8	550	12	X		X		X		X		X		X		X		X	
				14		X		X		X		X		X		X		X		X
		11	550	12		X		X		X		X		X		X		X		X
				14	X		X		X		X		X		X		X		X	X

Each X designates a test section.

DGAB = Dense-graded untreated aggregate base.
LCB = Lean concrete base.
PATB / DGAB = 4-inch permeable asphalt-treated base on 4-inch untreated DGAB base.

Table 5. Study parameters for the experiment on structural factors for jointed reinforced concrete pavements.

Pavement Structure Factors					Moisture, Temperature, and Subgrade Type															
Drainage	Base Type	Portland Cement Concrete		Lane Width, feet	Wet								Dry							
					Freeze				No-Freeze				Freeze				No-Freeze			
					Fine		Coarse		Fine		Coarse		Fine		Coarse		Fine		Coarse	
		Thickness, inches	Strength, psi		1	2	3	4	5	6	7	8	9	10	11	12	13	14	15	16
No	LCB	8	550	12		X		X		X		X		X		X		X		X
				14	X		X		X		X		X		X		X		X	
			900	12	X		X		X		X		X		X		X		X	
				14		X		X		X		X		X		X		X		X
		11	550	12	X		X		X		X		X		X		X		X	
				14		X		X		X		X		X		X		X		X
			900	12		X		X		X		X		X		X		X		X
				14	X		X		X		X		X		X		X		X	
Yes	PATB DGAB	8	550	12		X		X		X		X		X		X		X		X
				14	X		X		X		X		X		X		X		X	
			900	12	X		X		X		X		X		X		X		X	
				14		X		X		X		X		X		X		X		X
		11	550	12	X		X		X		X		X		X		X		X	
				14		X		X		X		X		X		X		X		X
			900	12		X		X		X		X		X		X		X		X
				14	X		X		X		X		X		X		X		X	

Each X designates a test section.

DGAB = Dense-graded untreated aggregate base.
LCB = Lean concrete base.
PATB/DGAB = 4-inch permeable asphalt-treated base on 4-inch untreated DGAB base.

The experiment design stipulates that the effectiveness of each of the four treatments be evaluated independently. The effectiveness of combinations of treatments is not considered. Therefore, each test site includes four treated test sections in addition to a control section. Table 6 illustrates the 96 possible combinations for test sites, which are equally distributed in the four climatic regions.

Preventive Maintenance Effectiveness of Rigid Pavements

Initially the experiment on preventive maintenance effectiveness of rigid pavements (SPS-4) was intended to examine the effects of climatic region, subgrade soil (fine and coarse grained), pavement condition (good, fair, and poor), subbase type (granular and stabilized) and traffic rate (as a covariant) on jointed plain and jointed reinforced concrete pavement sections incorporating different preventive maintenance treatments. However, due to the limited participation by highway agencies in the experiment, the experiment design was revised to eliminate pavement condition as a study factor. Also, jointed reinforced concrete pavements were restricted to the wet-freeze and wet no-freeze climatic regions because this concrete pavement type is not commonly constructed in the dry climatic regions. The maintenance treatments evaluated in this study are crack/joint sealing and undersealing. It was not required that both crack/joint sealing and undersealing be performed on the same test sections.

The experiment design stipulates that the effectiveness of each of the two treatments be evaluated independently. The effectiveness of combinations of treatments is not considered. Therefore, each test site will include two treated test sections in addition to a control section. Table 7 illustrates the 24 possible combinations for the test sites, which include 16 sites for jointed plain concrete pavements and 8 sites for jointed reinforced concrete pavements. Of these 24 sites, 16 are located in the wet climatic zones and 8 are located in the dry climatic zones.

Rehabilitation of Asphalt Concrete Pavements

The experiment on rehabilitation of asphalt concrete pavements (SPS-5) examines the effects of climatic region, condition of existing pavement (fair and poor) and traffic rate (as a covariant) on pavement sections incorporating different methods of rehabilitation with asphalt concrete overlays. These rehabilitation methods include surface preparation (routine preventive maintenance and intensive preparation with cold milling and associated repairs), type of asphalt overlay (virgin and recycled), and overlay thickness (2 and 5 inches). The experiment design stipulates a traffic loading level in the study lane in excess of 100,000 ESAL/year.

The combinations of study factors in this experiment result in eight different rehabilitation options that will be constructed at each test site. Table 8 lists overlay details and preparation methods that must be constructed at each test site. These rehabilitation options are also evaluated for pavements in both fair and poor conditions. In addition, because of the

Table 6. Study parameters for the experiment on preventive maintenance effectiveness of flexible pavements.

Moisture		Wet								Dry							
Temperature		Freeze				No - Freeze				Freeze				No - Freeze			
Subgrade		Fine		Coarse		Fine		Coarse		Fine		Coarse		Fine		Coarse	
Traffic		Low	High	Low	High	Low	High	Low	High	Low	High	Low	High	Low	High	Low	High
Condition	SN Ratio																
Good	≤ 1	1	7	13	19	25	31	37	43	49	55	61	67	73	79	85	91
	> 1	2	8	14	20	26	32	38	44	50	56	62	68	74	80	86	92
Fair	≤ 1	3	9	15	21	27	33	39	45	51	57	63	69	75	81	87	93
	> 1	4	10	16	22	28	34	40	46	52	58	64	70	76	82	88	94
Poor	≤ 1	5	11	17	23	29	35	41	47	53	59	65	71	77	83	89	95
	> 1	6	12	18	24	30	36	42	48	54	60	66	72	78	84	90	96

SN = Structural number.

Table 7. Study parameters for the experiment on preventive maintenance effectiveness of rigid pavements.

Temperature			Freeze		No - Freeze	
Subgrade			Fine	Coarse	Fine	Coarse
Pavement	Moisture	Base Type				
Plain	Wet	Dense	1	3	5	7
		Stabilized	2	4	6	8
	Dry	Dense	9	11	13	15
		Stabilized	10	12	14	16
Reinforced	Wet	Dense	17	19	21	23
		Stabilized	18	20	22	24

Table 8. Study parameters for the experiment on rehabilitation of asphalt concrete pavements.

Factors for Rehabilitation Procedures			Moisture, Temperature, and Pavement Condition															
			Wet								Dry							
			Freeze				No-Freeze				Freeze				No-Freeze			
			Fair		Poor		Fair		Poor		Fair		Poor		Fair		Poor	
Surface Preparation	Overlay Material	Overlay Thickness, inches	1	2	3	4	5	6	7	8	9	10	11	12	13	14	15	16
Routine Maintenance (Control)		0	X	X	X	X	X	X	X	X	X	X	X	X	X	X	X	X
Minimum	Recycled AC	2	X	X	X	X	X	X	X	X	X	X	X	X	X	X	X	X
		5	X	X	X	X	X	X	X	X	X	X	X	X	X	X	X	X
	Virgin AC	2	X	X	X	X	X	X	X	X	X	X	X	X	X	X	X	X
		5	X	X	X	X	X	X	X	X	X	X	X	X	X	X	X	X
Intensive	Recycled AC	2	X	X	X	X	X	X	X	X	X	X	X	X	X	X	X	X
		5	X	X	X	X	X	X	X	X	X	X	X	X	X	X	X	X
	Virgin AC	2	X	X	X	X	X	X	X	X	X	X	X	X	X	X	X	X
		5	X	X	X	X	X	X	X	X	X	X	X	X	X	X	X	X

Each X designates a test section.

AC = Asphalt concrete.

difference in condition and details of the existing pavements, these sites will be replicated in each climatic region for each pavement condition. Therefore, the experiment includes 128 test sections constructed at 16 sites, 4 of which are to be located in each of the four climatic regions.

Rehabilitation of Jointed Portland Cement Concrete Pavements

The experiment on rehabilitation of jointed portland cement concrete pavements (SPS-6) examines the effects of climatic region, type of pavement (plain and reinforced), condition of existing pavement (fair and poor), and traffic rate (as a covariant) on pavement sections incorporating different methods of rehabilitation with and without asphalt concrete overlays. Initially, jointed reinforced concrete pavements were included in the dry-freeze climatic region but not in the dry-no freeze region. However, following recommendations by SHRP advisory groups, the experiment design was modified so that jointed reinforced concrete pavements are no longer included in either the dry-freeze zone or the dry-no freeze zone because the use of this pavement design is not widespread in these climatic zones. The rehabilitation methods include surface preparation (a limited preparation and full concrete pavement restoration) with a 4-inch thick asphalt concrete overlay or without an overlay, crack/break and seat with different asphalt concrete overlays (4 and 8 inches), and limited surface preparation with a 4-inch thick asphalt concrete overlay with sawed and sealed joints. The experiment design stipulates a traffic loading level in the study lane in excess of 200,000 ESAL/year.

The combinations of study factors in this experiment result in seven different rehabilitation options to be constructed at each site. Table 9 lists restoration details that must be performed at each site. These rehabilitation options are to be evaluated for pavements in both fair and poor conditions. In addition, because of the difference in condition and details of the existing pavements, these sites will be replicated in the wet-freeze, wet-no freeze, and dry-freeze climatic regions for each pavement type and condition. No replication is planned for the jointed plain concrete pavements in the dry-no freeze climatic region. Therefore, the experiment includes 154 test sections located at 22 sites. These sites include 8 jointed reinforced concrete pavements (4 in the wet-freeze and 4 in the wet-no freeze region) and 14 jointed plain concrete pavements (4 in each of the wet-freeze, wet-no freeze, and dry-freeze regions and 2 in the dry-no freeze region).

Bonded Concrete Overlays of Concrete Pavements

The experiment on bonded concrete overlays of concrete pavements (SPS-7) examines the effects of climatic region, type of pavement (jointed and continuously reinforced), and condition of existing pavement and traffic (as covariants) on pavement sections incorporating different rehabilitation methods and concrete overlays. These rehabilitation methods include different surface preparation methods (cold milling plus sand blasting and shot blasting), bonding agents (neat cement grout or none), and overlay thickness (3 and 5 inches). The

Table 9. Study parameters for the experiment on rehabilitation of jointed portland cement concrete pavements.

Factors for Rehabilitation Procedures		Moisture, Temperature, Pavement Type, and Pavement Condition																					
		Wet																Dry					
		Freeze								No-Freeze								Freeze				No-Freeze	
		JPCP				JRCP				JPCP				JRCP				JPCP				JRCP	
		Fair		Poor		Fair		Poor		Fair		Poor		Fair		Poor		Fair		Poor		Fair	Poor
Surface Preparation	Overlay Thickness, inches	1	2	3	4	5	6	7	8	9	10	11	12	13	14	15	16	17	18	19	20	21	22
Routine Maintenance (Control)	0	X	X	X	X	X	X	X	X	X	X	X	X	X	X	X	X	X	X	X	X	X	X
Minimum Restoration	0	X	X	X	X	X	X	X	X	X	X	X	X	X	X	X	X	X	X	X	X	X	X
	4	X	X	X	X	X	X	X	X	X	X	X	X	X	X	X	X	X	X	X	X	X	X
	4	X	X	X	X	X	X	X	X	X	X	X	X	X	X	X	X	X	X	X	X	X	X
Maximum Restoration	0	X	X	X	X	X	X	X	X	X	X	X	X	X	X	X	X	X	X	X	X	X	X
	4	X	X	X	X	X	X	X	X	X	X	X	X	X	X	X	X	X	X	X	X	X	X
Crack/Break and Seat	4	X	X	X	X	X	X	X	X	X	X	X	X	X	X	X	X	X	X	X	X	X	X
	8	X	X	X	X	X	X	X	X	X	X	X	X	X	X	X	X	X	X	X	X	X	X

Each X designates a test section.

JPCP = Jointed plain concrete pavement.
JRCP = Jointed reinforced concrete pavement.

experiment design stipulates a traffic loading level in the study lane in excess of 200,000 ESAL/year.

The combinations of study factors in this experiment result in eight different overlay options that must be constructed at each site. Table 10 lists overlay and preparation details that must be performed at each site. The experiment includes 96 test sections located at 12 test sites, 3 of which are located in each of the four climatic regions. Ideally, jointed plain, jointed reinforced, and continuously reinforced concrete pavements should be located in each climatic region.

Environmental Effects in the Absence of Heavy Loads

The experiment on environmental effects in the absence of heavy loads (SPS-8) examines the effect of climatic factors in the four environmental regions and subgrade type (frost-susceptible, expansive, fine, and coarse) on pavement sections incorporating different designs of flexible and rigid pavements and subjected to very limited traffic as measured by the ESAL accumulation. Pavement structure includes two levels of structural design for both flexible and rigid pavements. Flexible pavement sections consist of 4 inches of asphalt concrete surface on an 8-inch-thick dense-graded untreated granular base or 7 inches of asphalt concrete surface on a 12-inch-thick dense-graded untreated granular base. Rigid pavement test sections consist of 8- or 11-inch-thick doweled jointed plain concrete slabs on a 6-inch-thick dense-graded granular base. The experiment design stipulates that traffic volume in the study lane be at least 100 vehicles per day but not more than 10,000 ESAL/year.

The combinations of study factors in this experiment result in two flexible pavement structures and two rigid pavement structures. The flexible and rigid pavement sections may be constructed at the same site or at different sites, as illustrated in Table 11. The experiment includes 24 flexible and 24 rigid pavement test sections constructed at 12 or 24 test sites, depending on whether the rigid and flexible test sections are constructed at the same site.

Asphalt-Aggregate Mixture Specifications

The experiment on validation of SHRP asphalt specifications and mix design and innovations in asphalt pavements (SPS-9) provides means for validating the performance-based asphalt and asphalt-aggregate mixture specifications developed by SHRP asphalt research through controlled in-service projects. Also, the experiment provides a direct comparison, in terms of pavement performance, between existing highway agencies' specifications and SHRP's performance-based specifications. In addition, the experiment provides a forum for evaluating stone matrix asphalt (SMA) and other innovative materials and/or features. Therefore, the experiment requires the construction of asphalt concrete pavement layers (new pavement or overlay) of the same thickness of the different mixture designs at the same site

Table 10. Study parameters for the experiment on bonded concrete overlays.

Overlay Factors			Moisture, Temperature, and Pavement Type											
			Wet						Dry					
			Freeze			No-Freeze			Freeze			No-Freeze		
Overlay Preparation	Used Grout	Overlay Thickness, inches	JCP		CRCP	JCP		CRCP	JCP		CRCP	JCP		CRCP
			1	2	3	4	5	6	7	8	9	10	11	12
Cold Milling Plus Sand Blasting	No	3	X	X	X	X	X	X	X	X	X	X	X	X
		5	X	X	X	X	X	X	X	X	X	X	X	X
	Yes	3	X	X	X	X	X	X	X	X	X	X	X	X
		5	X	X	X	X	X	X	X	X	X	X	X	X
Shot Blasting	No	3	X	X	X	X	X	X	X	X	X	X	X	X
		5	X	X	X	X	X	X	X	X	X	X	X	X
	Yes	3	X	X	X	X	X	X	X	X	X	X	X	X
		5	X	X	X	X	X	X	X	X	X	X	X	X

Each X desginates a test section.

JCP = Jointed concrete pavement.
CRCP = Continuously reinforced concrete pavement.

Table 11. Study parameters for the experiment on environmental effects.

Pavement Sturcture Factors			Moisture, Temperature, and Subgrade Type[2]																							
			Wet												Dry											
			Freeze						No-Freeze						Freeze						No-Freeze					
			Active		Fine		Coarse		Active		Fine		Coarse		Active		Fine		Coarse		Active		Fine		Coarse	
Pavement Type	Surface[1] Thickness, inches	DGAB Thickness, inches	1	2	3	4	5	6	7	8	9	10	11	12	13	14	15	16	17	18	19	20	21	22	23	24
Flexible	4	8	X		X		X		X		X		X		X		X		X		X		X		X	
	7	12	X		X		X		X		X		X		X		X		X		X		X		X	
Rigid	8	6		X		X		X		X		X		X		X		X		X		X		X		X
	11	6		X		X		X		X		X		X		X		X		X		X		X		X

Each X designates a test section.

DGAB = Dense-graded aggregate base.

[1] Dense-graded hot-mix asphalt concrete and jointed plain concrete for flexible and rigid pavements, respectively.

[2] Active soil can be either frost-susceptible or swelling (expansive) type.

in the different climatic regions. The experiment design stipulates a traffic loading level in the study lane in excess of 50,000 ESAL/year.

Initially, the experiment was designed to include test sites comprising any of the following three test sections:

- State mixture design and SHRP Mixture Design and Analysis System.
- State mixture design and SMA mixture.
- State mixture design, SHRP Mixture Design and Analysis System, and SMA mixture.

However, following recommendations by SHRP advisory groups, the experiment design was modified so that test sections incorporating both the state and SHRP mixture designs must be constructed at each test site. Thus, a test site must include at least two test sections representing the existing state mixture and SHRP mixture designs for each of the 41 moisture-temperature combinations. However, each test site may include a third test section constructed with SMA mixture. Table 12 illustrates the 41 moisture-temperature combinations in which test sites will be constructed. In addition, each test site will be replicated either on the same project or on a different project within the same moisture-temperature combination. Thus, the experiment will include 164 to 246 test sections located at 82 test sites.

Table 12. Study climates for the experiment on asphalt-aggregate mixture specifications.

Moisture		< 10 inches				10 to 24 inches				25 to 40 inches				> 40 inches			
High Temperature		1	2	3	4	1	2	3	4	1	2	3	4	1	2	3	4
Low Temperature	< -30 °F	XX	XX			XX	XX			XX	XX						
	-30 to -21 °F	XX	XX	XX		XX	XX	XX		XX	XX			XX	XX		
	-20 to -10 °F	XX	XX	XX		XX	XX	XX		XX	XX	XX		XX	XX		
	> -10 °F	XX	XX	XX	XX	XX	XX	XX	XX	XX	XX	XX		XX	XX	XX	

Each X designates a test site.

Moisture = Annual precipitation.
Low Temperature = Annual lowest expected temperature.
High Temperature = Highest monthly mean average maximum daily temperature. 1 = < 80 °F, 2 = 80 to 89 °F, 3 = 90 to 100 °F, 4 = > 100 °F.

3

Project and Participation Requirements

The Specific Pavement Studies (SPS) experiments have been developed as a set of coordinated national experiments to address the needs of the highway community at large and not only the participating highway agencies. Therefore, to accomplish the SPS objectives, test sites must meet specific criteria and the participating agencies must be willing to perform certain activities.

Project Requirements

Projects considered for inclusion in the SPS experiments must meet certain criteria. These criteria will ensure that the performance of the test sections relative to each other is due to the design parameters incorporated in the experiment and not to external factors such as changes in subgrade or traffic patterns. Also, adherence to these criteria will ensure that any difference in performance between test sections constructed with similar experimental parameters at different locations is primarily due to difference in climatic conditions and traffic levels.

The following criteria are to be considered in evaluating the suitability of projects for inclusion in the SPS experiments:

1. For the experiments on structural factors and environmental effects, the project must include new construction of all pavement layers for a new route, realignment, reconstruction, or construction of an experimental parallel roadway. For the experiments on rehabilitation, the project must include restoration and/or overlay of pavements in their first performance cycle. For the experiment on asphalt-aggregate mixture specifications, the project may include new construction or resurfacing of an existing pavement. For the experiments on pavement maintenance, the test site must include a General Pavement Studies (GPS)-approved test section. Projects in which the experimental sections are constructed as added lanes or as a partial reconstruction (removal and replacement of surface layers only) are not suitable.

2. The construction project must be of sufficient length to accommodate all of the experiment test sections. Transition zones of appropriate length are required between test sections to accommodate changes in layer thickness, materials, or other study parameters.

3. All test sections at one site must be constructed on subgrade soils with similar characteristics and classifications. Variation in soil characteristics at each site should be minimized as much as possible.

4. Test sections should be located on portions of the project that are relatively straight and have a uniform vertical grade. Horizontal curves greater than 3° and vertical grades greater than 4 percent should be avoided. All test sections on a project must have the same transverse cross section profile of the pavement surface to obtain the same surface drainage conditions.

5. Ideally, all test sections should be located on shallow fills. The entire length of each test section, however, should be located completely on either a cut or a fill. Cut-fill transitions and side hill fills should be avoided.

6. It is highly desirable that all portions of the project that include test sections be opened to traffic at the same time.

7. Culverts, pipes, and other structures beneath the pavement should be avoided within the limits of each test section. Subsurface structures, if required, should be located in the transition zones between test sections.

8. The projects should be located on a route with an expected traffic loading level in the study lane that conforms to the criteria stipulated in the experiment design (> 100,000 ESAL/year for SPS-1 and 5; > 200,000 ESAL/year for SPS-2, 6, and 7; > 50,000 ESAL/year for SPS-9; < 10,000 ESAL/year for SPS-8).

9. Traffic flow over all the test sections on a project should be uniform. All sections should carry the same traffic stream. Intersections, rest stops, on-off ramps, weaving areas, quarry entrances, etc., should be avoided on and between test sections on a project. However, following recommendations by SHRP advisory groups, minor variations in traffic rates between test sections at the site due to intersections, on-off ramps, etc., are allowed. However, these variations should not occur within any of the test sections.

10. For rehabilitation experiments, pavements that are excessively under- or overdesigned for existing site conditions should be avoided. As a general guide, the as-built structural number for flexible pavements should be between 0.8 and 1.2 times the design structural number computed using the *American Association of State Highway and Transportation Officials (AASHTO) Pavement Design Guide* procedure [2].

11. For rehabilitation projects, the type, extent, and severity of distress should be relatively uniform over the project and representative of the type of distress that occurs within the agency's jurisdiction.

As projects containing all of the desirable characteristics are not always readily available, candidate projects are evaluated individually to determine the extent of compliance with the desirable criteria and usefulness to the experiment. In a few cases, engineering judgment has been used to evaluate the impact of deviations from these criteria on test section performance and to assess the suitability of the test site for inclusion in the experiment. For example, variation in traffic level on the test sections at a specific site due to intermediate intersections and/or interchanges has been allowed in a few instances. Also, deviation from the desired geometric requirements has been allowed in some cases.

Participation Requirements

To ensure uniformity in construction and to obtain needed data on material characteristics, traffic rates, climatic conditions, and other factors at each test site, the participating highway agencies have agreed to perform several activities. Agencies participating in the SPS experiments are expected to perform the following functions:

1. Construct all test sections as required by the experimental design for the experiment. All test sections on a project must be constructed during the same construction season. The treatments within the length of the test sections must be applied across all lanes in the direction of travel. For the experiments, the agency provides for the development of the asphalt or concrete mixture designs and for the testing of the materials and mixtures used for the test sections in accordance with the specified procedures.

2. Install and operate a traffic data collection station at or near the site to measure the traffic that passes over the test sections. For the experiments on rehabilitation and asphalt-aggregate mixture specifications (SPS-5, 6, 7, and 9), this station must be operated to obtain, at a minimum, continuous automatic vehicle classification and to provide for four, 1-week sessions of seasonal weigh-in-motion each year. For the experiments on structural factors (SPS-1 and 2), the station must provide continuous weigh-in-motion. For the experiment on environmental effects (SPS-8), the station must provide continuous automatic vehicle classification supported by portable weigh-in-motion on an as-needed basis. For the experiments on pavement maintenance (SPS-3 and 4), traffic data collected for the on-site GPS test section is considered applicable to the SPS test site.

3. Purchase, install, and operate a weather station at SPS-1, 2, 8, and 9 test sites if sites are not located in proximity to an existing station.

4. For the experiment on asphalt-aggregate mixture specifications (SPS-9), purchase, install, and operate in-pavement instrumentation for monitoring pavement temperature and moisture.

5. Except for test sites for the experiments on pavement maintenance (SPS-3 and 4), perform and/or provide for drilling, coring, sampling, and testing of in-place pavement materials and materials used in construction or rehabilitation. The sampling and testing plans must be tailored to the site and conform to Strategic Highway Research Program (SHRP) operational memorandums and guides. Field and laboratory tests must be performed in accordance with the procedures established by SHRP.

6. Prepare plans, specifications, quantities, and all other documents necessary as a part of the agency's contracting procedures. The agency must also provide construction control, inspection, and management in accordance with its standard quality control and quality assurance procedures.

7. If an existing pavement will become part of the test sections, provide historical information on pavement inventory features, traffic levels and loads, and maintenance similar to that required for the GPS test sections.

8. Provide periodic traffic control for on-site data collection activities such as materials drilling and sampling, deflection measurements, and other monitoring activities.

9. Coordinate maintenance activities on the test sections to prevent premature application of treatments that alter the characteristics of the test sections and limit their use in the study.

10. Provide and maintain signing and marking of test sites.

11. Notify SHRP when any test section reaches an unsafe condition or becomes a candidate for rehabilitation to allow recording of the condition of the test section prior to rehabilitation.

To help the participating agencies perform these functions, SHRP has prepared a series of reports that outline guidelines for the different facets of participation (e.g., reports on procedures for evaluating candidate projects, sampling and testing needs, and construction requirements).

Test Site Requirements

The SPS experiments have been developed to study the effects of certain important factors on pavement performance. To accomplish this objective, a number of test sites with specific details are sought in each climatic region. Table 13 lists the number of test sites required in

each climatic region for each site-specific condition for the experiments on structural factors, rehabilitation, and environmental effects. Up to 106 sites are required for these experiments. This total includes 56 test sites of new pavement construction or reconstruction and 50 sites of pavement rehabilitation. The new construction projects include 28 sites of flexible pavements and 28 sites of rigid pavements. The rehabilitation projects include 16 sites of flexible pavement rehabilitation and 34 sites of rigid pavement rehabilitation. Thus, these SPS experiments include 44 test sites of flexible pavement and 62 test sites of rigid pavement.

In addition, the experiment on asphalt-aggregate mixture specifications requires 82 test sites that may include construction of asphalt concrete pavements or resurfacing of existing asphalt concrete or portland cement concrete pavements. The experiments on pavement maintenance require 128 test sites. These sites include 81 sites of flexible pavement maintenance and 47 sites of rigid pavement maintenance. Thus, the entire SPS program (SPS-1 through SPS-9) will include 316 test sites distributed throughout the United States and Canada.

Table 13. Number of test sites required.

Experiment	Wet Freeze	Dry Freeze	Wet No-Freeze	Dry No-Freeze	Total
SPS-1	4	4	4	4	16
SPS-2	4	4	4	4	16
SPS-5	4	4	4	4	16
SPS-6	8	4	8	2	22
SPS-7	3	3	3	3	12
SPS-8	3 to 6	3 to 6	3 to 6	3 to 6	12 to 24
Total	26 to 29	22 to 25	26 to 29	20 to 23	94 to 106

4

Project Recruitment and Approval Process

To obtain the needed test sites for the experiments on structural factors, rehabilitation, environmental effects, and asphalt-aggregate mixture specifications, a systematic procedure was followed. This procedure involved a request for nomination of test sites, evaluation of candidate projects, and approval of selected test sites. The process is illustrated in Figure 4.

Project Solicitation and Nomination

To assist the highway agencies in nominating test sites for the Specific Pavement Studies (SPS) experiments, guidelines for nomination and evaluation of candidate projects were developed for each experiment. These guidelines outlined project selection criteria and participation requirements and included project nomination forms and instructions. The project selection criteria detailed the specific requirements for the test site and its desired characteristics. Participation requirements outlined the responsibilities of the participating agency concerning construction, testing, monitoring, and other related activities. The nomination forms are completed by the participating agency to provide detailed information on the proposed project to help assess its suitability for the experiment.

To encourage the highway agencies to identify and nominate test sites for the SPS experiments, Strategic Highway Research Program (SHRP) staff and contractors participated in several meetings to discuss the details, objectives, and benefits of the SPS. These meetings ranged from those held with representatives from one highway agency to those held with representatives from agencies from one SHRP region and others held with representatives from agencies from throughout the United States and Canada. Also, because of the nature of the experiment on environmental effects and the potential suitability of National Park Service and Forest Service roads for this experiment, meetings were held with the Federal Lands Highway Office and Divisions of the Federal Highway Administration (FHWA). As a result of these meetings, a number of potential sites were identified on National Park Service roads. In addition, the SHRP executive director, executive committee chairman, staff, and contractors and FHWA officials have periodically communicated with highway agencies regarding the status of the SPS and the need for specific test sites.

A highway agency desiring to participate in the SPS must complete the nomination forms for the experiment in which participation is sought. A sample of these nomination forms, for the SPS-1 experiment on structural factors for flexible pavements, is shown in Table 14. These

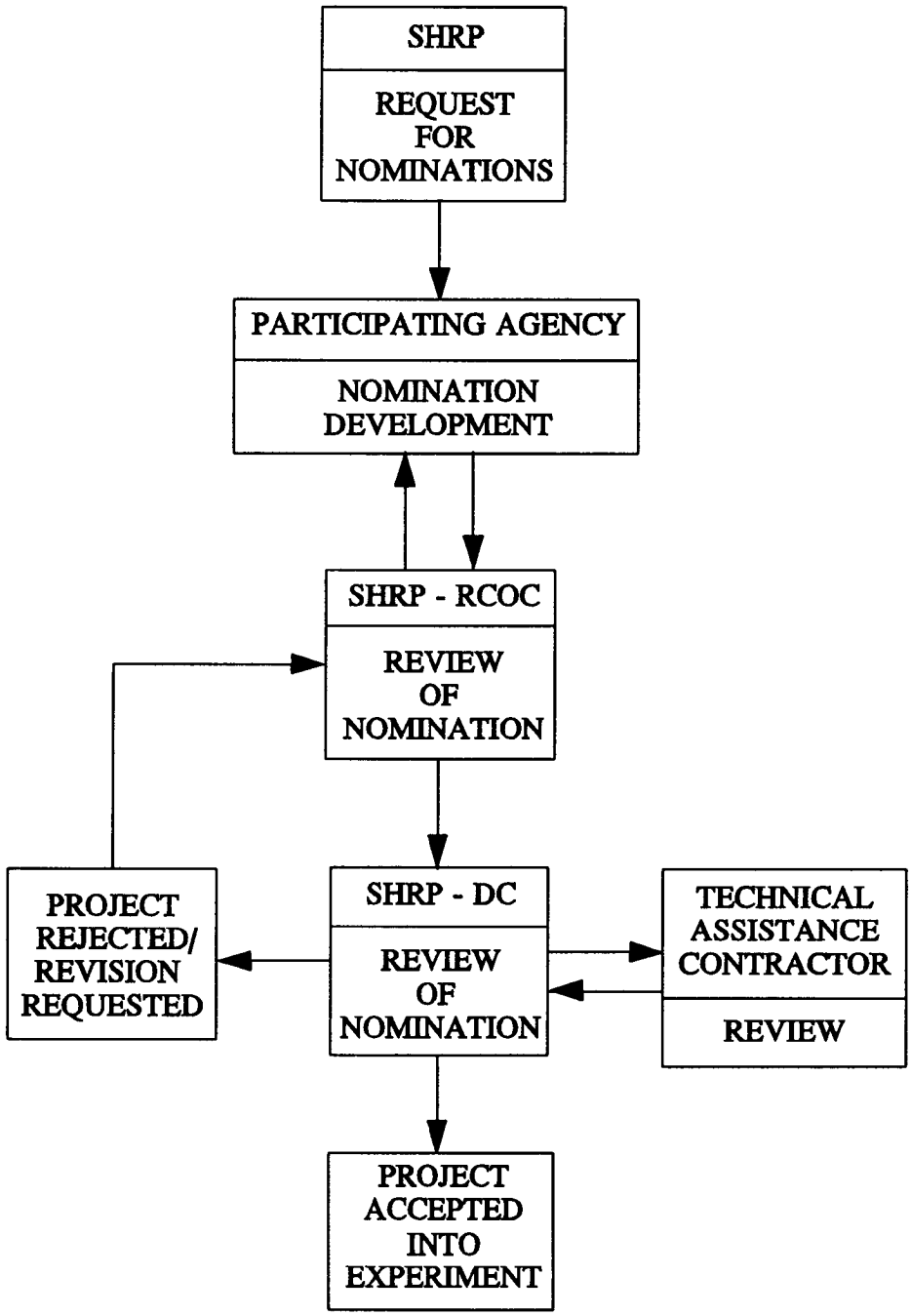

Legend

RCOC = Regional coordination office contractor
DC = Washington, D.C.

Figure 4. Project recruitment and approval process.

Table 14. Sample nomination forms.

SHEET A. SPS-1 CANDIDATE PROJECT NOMINATION AND INFORMATION FORM

STATE _____ SHRP SECTION NO _____

GENERAL PROJECT INFORMATION

PROJECT LOCATION

ROUTE NUMBER _____

ROUTE SIGNING [] Interstate [] U.S. [] State [] County

Other _____

PROJECT LOCATION Start Milepost _____ End Milepost _____

Start Station _____ End Station _____

DIRECTION OF TRAVEL [] North B. [] South B. [] West B. [] East B.

PROJECT LOCATION DESCRIPTION _____

_____

_____

COUNTY _____

HIGHWAY AGENCY DISTRICT NUMBER _____

SHRP ENVIRONMENTAL ZONE

[] WET FREEZE [] WET NO-FREEZE [] DRY FREEZE [] DRY NO-FREEZE

SIGNIFICANT DATES

LATEST DATE OF APPROVAL NOTIFICATION FROM SHRP _____

CONTRACT LETTING DATE _____

ESTIMATED CONSTRUCTION START DATE _____

ESTIMATED DATE TEST SECTIONS OPENED TO TRAFFIC _____

ESTIMATED CONSTRUCTION COMPLETION DATE _____

PROJECT DESCRIPTION

PROJECT TYPE [] New Route [] Removal and Reconstruction [] Parallel Roadway

Other _____

_____

_____

FACILITY [] Divided [] Undivided NUMBER OF LANES (One Way) _____

DESIGN TRAFFIC DATA

ANNUAL AVERAGE DAILY TRAFFIC (TWO DIRECTIONS) _____

% HEAVY TRUCKS AND COMBINATIONS (OF AADT) _____

ESTIMATED 18K ESAL RATE IN STUDY LANE (1,000 ESAL/YR) _____

TOTAL DESIGN 18K ESAL APPLICATIONS IN DESIGN LANE _____

DESIGN PERIOD (Years) _____

Table 14. Sample nomination forms (continued).

SHEET B. SPS-1 CANDIDATE PROJECT NOMINATION AND INFORMATION FORM

STATE _____ SHRP SECTION NO _____

AGENCY'S PAVEMENT STRUCTURE DESIGN FOR SITE

LAYER[1] NO.	LAYER[2] DESCRIPTION CODE	MATERIAL TYPE[3] CLASS CODE	THICKNESS[4] (INCHES)	STRUCTURAL[5] COEFFICIENT
1	SUBGRADE (7)	__ __	__ __ __	_____
2	__ __	__ __	__ __.__	0.__ __
3	__ __	__ __	__ __.__	0.__ __
4	__ __	__ __	__ __.__	0.__ __
5	__ __	__ __	__ __.__	0.__ __
6	__ __	__ __	__ __.__	0.__ __
7	__ __	__ __	__ __.__	0.__ __
8	__ __	__ __	__ __.__	0.__ __
9	__ __	__ __	__ __.__	0.__ __

STRUCTURAL DESIGN METHOD [] 1972 AASHTO [] 1986 AASHTO [] Modified AASHTO

Other _____

AASHTO DESIGN RELIABILITY FACTORS R% _____ S_o _____

OUTSIDE SHOULDER TYPE

[] Turf [] Granular [] Asphalt Concrete [] Surface Treatment

[] PCC [] Curb and Gutter Other _____

OUTSIDE SHOULDER WIDTH (Feet) _____

SUBSURFACE EDGE DRAINS [] Yes [] No

NOTES

1. Layer 1 is the natural occurring subgrade soil. The pavement surface will have the largest assigned layer number.

2. Layer description codes:
   Surface Layer ... 03 Base Layer ..... 05 Subgrade 07
   Subsurface HMAC .. 04 Subbase Layer ..... 06 Embankment (Fill) 11

3. Refer to Tables 1 through 4 for material class codes.

4. If subgrade depth to a rigid layer is known, enter this depth for subgrade thickness, otherwise leave subgrade layer thickness blank.

5. Enter AASHTO structural layer coefficient value, as appropriately modified, used in pavement design or typical coefficient used by agency for this material. For the subgrade, enter either AASHTO soil support value or resilient modulus value (psi) used in design.

Table 14. Sample nomination forms (continued).

SHEET C. SPS-1 CANDIDATE PROJECT NOMINATION AND INFORMATION FORM

STATE _____ SHRP SECTION NO _____

TEST SECTION LAYOUT

NUMBER OF TEST SECTIONS ENTIRELY ON: FILL _____ CUT _____

SHORTEST TRANSITION BETWEEN CONSECUTIVE TEST SECTIONS (Feet) _____

VERTICAL GRADE (Avg %) (+ upgrade; - downgrade) _____

HORIZONTAL CURVATURE (Degrees) [] Tangent _____

COMMENTS ON DEVIATIONS FROM DESIRED SITE LOCATION CRITERIA _____

_____

_____

_____

_____

_____

_____

_____

OTHER SHRP TEST SECTIONS

DOES AGENCY DESIGN CONFORM TO GPS-1 OR GPS-2 PROJECT CRITERIA? [] YES [] NO

DISTANCE TO NEAREST GPS TEST SECTION ON SAME ROUTE (Miles) _____

TEST SECTION NUMBER OF NEAREST GPS SECTION _____

SUPPLEMENTAL TEST SECTIONS

IF SUPPLEMENTAL EXPERIMENTAL TEST SECTIONS ARE PROPOSED, COMPLETE THE FOLLOWING

TOTAL NUMBER OF SUPPLEMENTAL TEST SECTIONS _____

FACTORS TO BE INVESTIGATED _____

_____

_____

_____

_____

_____

_____

forms provide information on project location, traffic rate, project layout and geometry, and the agency's construction plan. In addition, these forms provide information on the anticipated contract and construction schedule and the deadline for SHRP's decision concerning the approval of the proposed test site to allow the agency's participation.

The nomination forms are generally submitted to the appropriate SHRP regional office. Based on a review of the nomination form, the regional staff determines the possible suitability of the proposed test site for the intended experiment. If the proposed project appears to be a potential candidate for the study, project verification follows. Otherwise, the participating agency is notified of the unsuitability of the nominated project for inclusion in the study. For example, projects with traffic levels substantially different from those required for the experiments are unacceptable, and projects with relatively thin pavement structures are not suited for the rehabilitation studies. Such projects may be considered unacceptable based on the information furnished on the nomination forms and no further evaluation will be required.

Project Verification

Project verification consists of two parts: a project record review conducted in the participating agency's office and a site visit. These two verification steps are performed by the staff of the regional coordination office contractor (RCOC) together with representatives of the participating agency's office and, when possible, the SHRP regional engineer.

The project record review allows the RCOC staff to become familiar with the project prior to the site visit and thus expedite the field verification process. During this review, the RCOC staff performs the following activities:

- Reviews project records, including as-built plans, cross sections, profiles, and specifications for maintenance and rehabilitation projects.
- Reviews available information on soil borings and materials along the project to evaluate subgrade uniformity at the test site.
- Confirms candidate project data by comparing as-built plans with data furnished on the nomination forms.
- Identifies potential test section locations within the project by inspecting geometric, drainage, and other relevant factors.
- Reviews traffic and safety considerations.
- Reviews photo logs or other site-specific data, if available, to help identify suitable test section locations.

- Identifies any planned maintenance, rehabilitation, or other construction that may affect the suitability of the project for inclusion in the study.

- Reviews available information on traffic rates and patterns to confirm suitability of the test site for the intended experiment.

Also during the office project record review, the potential locations of the test sections at the site are identified. The suitability of these locations is confirmed during the site visit.

During the site visit, the actual test sections are located after a review of the potential locations identified as part of the project record review. For rehabilitation experiments, a survey of pavement condition and distress is made to assess the uniformity and similarity of the test sections. Also during the site visit, the initially identified locations of subsurface structures and intersections are confirmed. In addition, the suitability of the test site with regard to safety aspects is evaluated.

Project Approval

Following the office record review and the field visit, the regional office staff furnishes copies of project plans, cross sections, profiles and other details indicating the proposed locations of the test sections to SHRP headquarters. The SHRP staff, in consultation with the Long-Term Pavement Performance (LTPP) Technical Assistance Contractor's staff, reviews the furnished details to assess the suitability of the proposed test site for inclusion in the experiment. In this assessment, consideration is given to those factors that affect the usefulness of the test site in achieving the experiment's objectives. These factors include the following:

- Suitability of the project to accommodate all the test sections.

- Traffic rate and possible change in traffic flow along the test site.

- Subgrade material and variation along the test site.

- Alignment and geometry of test sections.

- Locations of culverts, pipes, and subsurface structures within the limits of test sections.

- For rehabilitation projects, variation in pavement condition and distress along the test site.

- For rehabilitation projects, structural design of the existing pavement and whether it is excessively over- or underdesigned for the prevailing traffic levels.

Based on the results of this evaluation, the proposed project is assessed and classified into one of three categories: approved, tentatively approved, and unacceptable. Projects classified as approved are those that meet all the requirements stipulated for the experiment or that require minor modifications. Projects classified as tentatively approved are projects that meet the essential requirements for the experiment but require some adjustments to conform to other criteria. For example, projects requiring shifting of the proposed test sections to avoid subsurface structures or narrow horizontal curves, or to allow adequate space between test sections for destructive testing and changes in pavement structure, may be classified as tentatively approved until the appropriate changes are made. Projects classified as unacceptable are those that do not meet the essential requirements for the experiment. For example, projects with excessive variation in traffic level on the test sections due to intermediate interchanges or intersections are not suited for the SPS experiments and are considered unacceptable.

Following this review, SHRP headquarters informs the SHRP regional office of the review findings and the decision concerning the approval of the proposed project. Also, because the experiments on structural factors for flexible and rigid pavements (SPS-1 and SPS-2) require the construction of 12 of the 24 possible test sections at each site, the approval of test sites for these experiments identifies the specific experimental set that must be constructed at the evaluated test site. The SHRP regional office then notifies the nominating agency of the results of the review and approval process. For those projects classified as tentatively approved, the regional office coordinates with the nominating agency the necessary action to revise test site location and/or details to conform to the experiment requirements. The revised plans are then submitted to SHRP headquarters for review and final approval.

Following the approval of a test for inclusion in the SPS, RCOC staff, together with the SHRP regional engineer, coordinates with the participating agency the different activities required for project implementation. This coordination ensures that the test site is constructed in accordance with the guidelines stipulated for the experiment and thus provides the information needed to achieve the objectives of the experiment. The activities required for project implementation vary from one experiment to another and include such activities as marking and signing the test sections, sampling and testing pavement materials and subgrade, traffic control, performance monitoring, climatic data collection, and traffic monitoring.

5

Construction Guidelines

The Specific Pavement Studies (SPS) experiments have been developed as a set of coordinated national experiments to address the needs of the highway community at large and not only the participating highway agencies. Also, each of the SPS experiments requires the construction of multiple test sections with similar details and/or materials at several sites distributed throughout the United States and Canada. The number of planned test sites ranges from 12 for the experiment on bonded concrete overlays and each portion of the experiment on environmental effects to 102 for the experiment on asphalt-aggregate mixture specifications. The number of test sections at each site ranges from 2 for the experiments on environmental effects and asphalt-aggregate mixture specifications to 12 for the experiments on structural factors for rigid and flexible pavements. The number of sections at a test site could be as high as 26 if test sections for both supplementary experiments on rigid pavements are incorporated at one location. Therefore, it is important to control construction uniformity at all test sites to reduce the influence of construction variability on test results. To achieve this goal, guidelines were developed for each experiment to help the participating highway agencies develop acceptable construction plans for the test sections. These guidelines address the needs for the test sections required for the national experiment but not those sections added to study features or details of particular interest to the participating agency.

To ensure practical and implementable details for the test sections, the construction guidelines were generally developed in cooperation with state and provincial highway agencies and the Federal Highway Administration (FHWA). Strategic Highway Research Program (SHRP) technical assistance contractors developed preliminary construction guidelines based on state-of-the-art knowledge of the subject and a review by individuals from the Federal Highway Administration, the pavement industry, and SHRP. The preliminary construction guidelines were then presented to representatives of state and provincial highway agencies and FHWA in a number of review meetings. The first of these meetings was held in Tempe, Arizona, in April 1990 to review the details of the experiment on rehabilitation of asphalt concrete pavements (SPS-5). This meeting was followed by a meeting in Ames, Iowa, in May 1990 to review the details of the experiments on rehabilitation of jointed portland cement concrete pavements (SPS-6) and on bonded portland cement concrete overlays (SPS-7). The details of the experiments on structural factors (SPS-1 and 2) were reviewed in a meeting held in Atlanta, Georgia, in September 1990. In April 1992, the details of the experiment on asphalt-aggregate mixture specifications (SPS-9) were reviewed in a meeting held in Kansas City, Missouri, in April 1992. Results of these review meetings were incorporated in final construction guidelines for each experiment. Construction guidelines for crack sealing, slurry seal, and chip seal required for the

experiment on preventive maintenance effectiveness of flexible pavements (SPS-3) and for crack/joint sealing and undersealing required for the experiment on preventive maintenance effectiveness of rigid pavements (SPS-4) were developed for each region by an advisory group that met in Austin, Texas, in February 1988. During the course of this development, SHRP advisory groups and the pavement industries were advised of the progress and their comments were sought and considered in the final guidelines.

The construction guidelines addressed those items that should be considered by the participating highway agencies when preparing plans, technical provisions, bid documents, and other related information to ensure adherence to the study requirements. Specifically, the guidelines addressed the following items:

- The experimental levels that must be included in the test site.
- The primary construction features that must be incorporated in the test sections.
- Specifications for the construction materials and details required for the test sections.
- Typical cross sections and details for the different test sections.
- Construction operations and as-built requirements.
- Special considerations and limitations that should be observed.

The final construction guidelines for each experiment were distributed to all state and provincial highway agencies. In addition, SHRP and the technical assistance and regional coordination office contractors provided clarification of items included in the guidelines when requested by a participating agency.

Structural Factors for Flexible Pavements

The experiment on structural factors for flexible pavements (SPS-1) addresses the effects of drainage, asphalt concrete surface thickness, and base type and thickness on pavement performance. Guidelines pertaining to these study factors were provided to ensure uniformity and consistency between test sites.

Preparation and Compaction of Subgrade

The construction guidelines outline the requirements for preparation and compaction of the subgrade. Fill material should be compacted to a minimum of 95% relative density for the top 12 inches with moisture content maintained in the range of 85 to 120% of the optimum moisture content. For new construction, subgrade should be compacted for the width of the travel lanes plus the width of inside and outside shoulders. For reconstruction projects, compaction should extend at least 3 feet outside the edge of the travel lanes to allow proper preparation of the subgrade and base course. Proof rolling is required to verify support uniformity and identify areas that require undercutting and replacement. Modifiers may be used to provide a stable working platform for construction but not to increase subgrade strength. Surface irregularities should be limited to a maximum of ¼ inch between two

points measured longitudinally or transversely using a 10-foot straightedge. Variations in finished subgrade elevations should be limited to a maximum of ½ inch from design elevation based on rod and level survey readings taken at a minimum of five locations (edge, outer wheel path, midlane, inner wheel path, and inside edge of lane) at longitudinal intervals of 50 feet. The location of survey measurements is illustrated in Figure 5.

Dense-Graded Aggregate Base

The guidelines stipulate the use of high-quality crushed stone, crushed gravel, or crushed slag for the untreated dense-graded aggregate base layer with at least 50% of the material retained in a No. 4 sieve. A 1½-inch nominal top size aggregate is desired, but a smaller top size may be used if it is normally specified by the participating agency. When evaluated by the Los Angeles Degradation Test (AASHTO T-96), the aggregate should not exhibit loss of more than 50% at 500 revolutions. No additives other than water should be used.

The construction requirements for the dense-graded aggregate base stipulate that the base course be compacted to a minimum of 95% relative density with a compacted layer thickness of not more than 8 inches. For new construction, compaction for the width of travel lanes plus the width of the inside and outside shoulders is required. For reconstruction projects, compaction must extend at least 3 feet outside the edge of the travel lane to allow proper preparation of the subgrade and base course. The base course surface must be primed with a low-viscosity asphalt and allowed to cure prior to placement of the asphalt concrete surface. Variations in finished base elevation should be limited to a maximum of ½ inch from design elevation based on rod and level survey readings taken according to the procedure described for the subgrade.

Asphalt-Treated Base

The guidelines stipulate that the asphalt-treated base be dense-graded, hot-laid, central-plant-mix, asphalt-treated material produced in conformance with the participating highway agency's specifications with some modifications. Requirements for the asphalt-treated base aggregates are the same as those stipulated for the untreated dense-graded aggregate base. Use of recycled asphalt concrete materials and asphalt emulsions in the mixture is excluded. Additives commonly used by the participating agency may be used, but the use of experimental additives or modifiers is not allowed.

Construction requirements for the asphalt-treated base are generally similar to those described for the hot-mix asphalt concrete (HMAC) surface. Thickness of the compacted lifts is limited to a maximum of 8 and 4 inches for the first and subsequent lifts, respectively. Surface irregularities are limited to a maximum of ¼ inch between two points measured longitudinally or transversely using a 10-foot straightedge. Finished elevations should be with ± ¼ inch of design elevations based on rod and level survey readings taken according to the procedure described for the subgrade. A tack coat of low-viscosity asphalt must be applied to the base course surface prior to placement of the asphalt concrete surface.

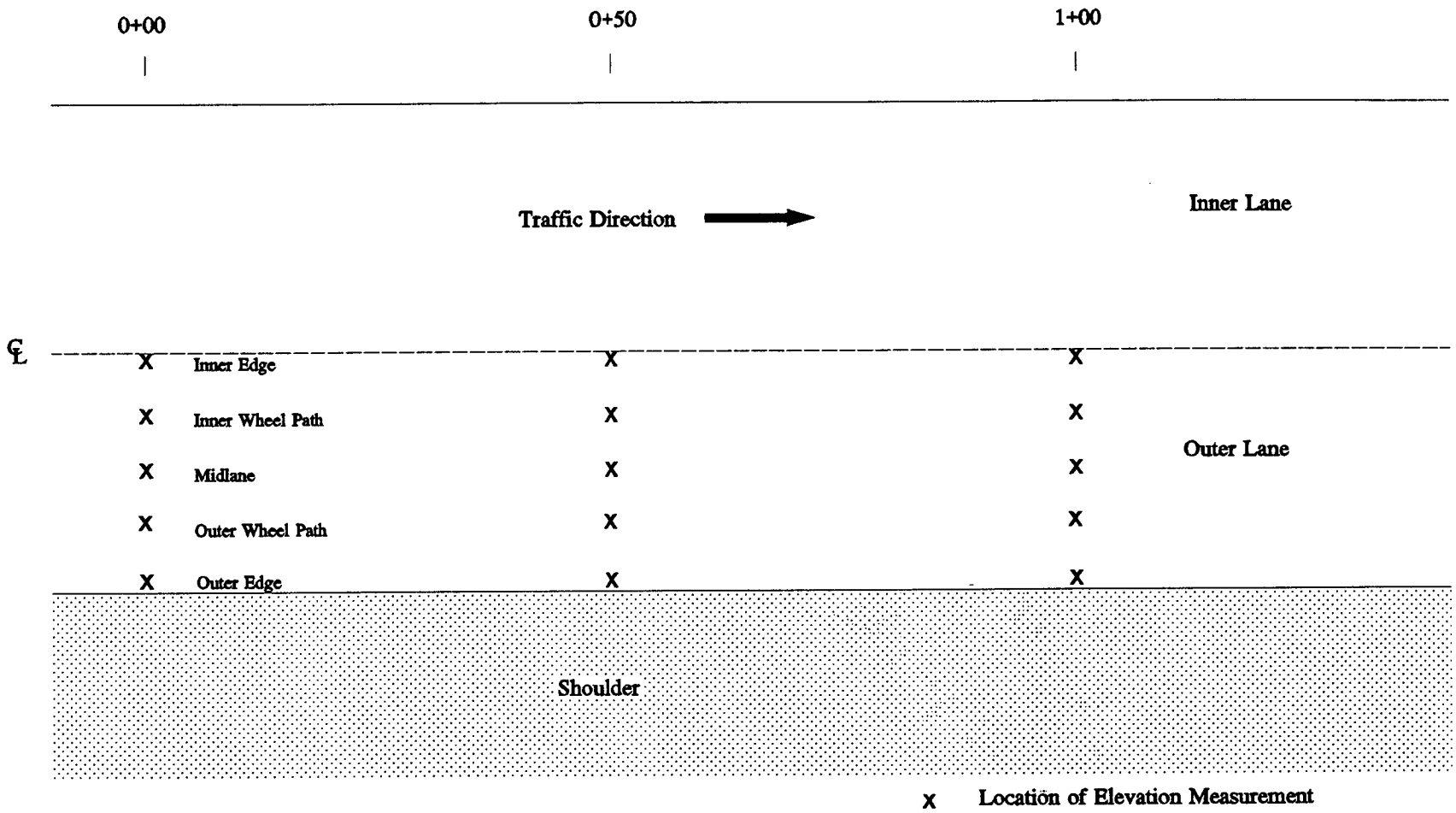

Figure 5. Location of elevation measurements.

Drained Base Structure

Some of the test sections in this experiment require a drained base structure that incorporates a permeable asphalt-treated base layer and edge drains to permit water to drain out of the pavement structure. The permeable asphalt-treated base layer is constructed in combination with an untreated or asphalt-treated dense-graded aggregate base layer.

The permeable asphalt-treated base material stipulated in the guidelines is an open-graded, hot-laid, central-plant-mixed, asphalt base material with an American Association of State Highway and Transportation Officials (AASHTO) No. 57 stone size or other gradation classified by the agency as a highly permeable drainage material. The aggregate shall consist of crushed material of which more than 90% by weight has at least one fractured face and of which no more than 2% passes the No. 200 sieve. The mix shall be designed using the same grade and type of the asphalt used in the surface course with a target asphalt cement content of 2 to 2.5%. Use of recycled asphalt concrete and asphalt emulsions is excluded. The permeable asphalt-treated base should be tested for vapor/moisture susceptibility and exhibit low stripping potential. Additives and modifiers commonly used by the participating agency to reduce stripping potential may be used. However, experimental additives or modifiers are excluded.

The construction guidelines for the permeable asphalt-treated base stipulate that no portion of the base be day-lighted. Compaction should be performed with a static wheel roller applying 0.5 to 1.0 ton per foot of roller width. No traffic shall be allowed to operate or park on the travel lane or outside shoulder portion of the base. However, limited operation of equipment such as delivery trucks on the inside edge can be tolerated. A track-mounted paver is required for those sections incorporating a permeable asphalt-treated base. Transverse interception drains, as illustrated in Figure 6, are required in the transition zone between the drained and undrained test sections. These drains should be installed on the down slope end of the permeable base layer.

Filter fabric (or geotextile) is required in the sections where the permeable base is located directly above the subgrade to prevent clogging of the permeable base layer due to migration of fine material from the subgrade. The guidelines stipulate that the filter fabrics conform to the recommendations of AASHTO-ABC-ARTBA Task Force 25 and be resistant to the heat and temperature expected during placement of the permeable layer. Nonwoven or woven geotextile materials that conform to Class A requirements should be used to separate the base layer from subgrade and for the transverse interceptor drains. However, geotextile materials conforming to Class B requirements should be used in edge drains. Filter fabric must be installed according to the manufacturer's specifications, placed directly beneath the permeable layer and extending around the outside edge drain trench across the travel lanes and around the inside edge drain trench. Geotextile should be overlapped a minimum of 2 feet at all longitudinal and transverse geotextile joints. Filter fabric that is ripped or torn during construction must be repaired or replaced. Exposure of geotextiles to elements between laydown and cover should be limited to a maximum of 3 days.

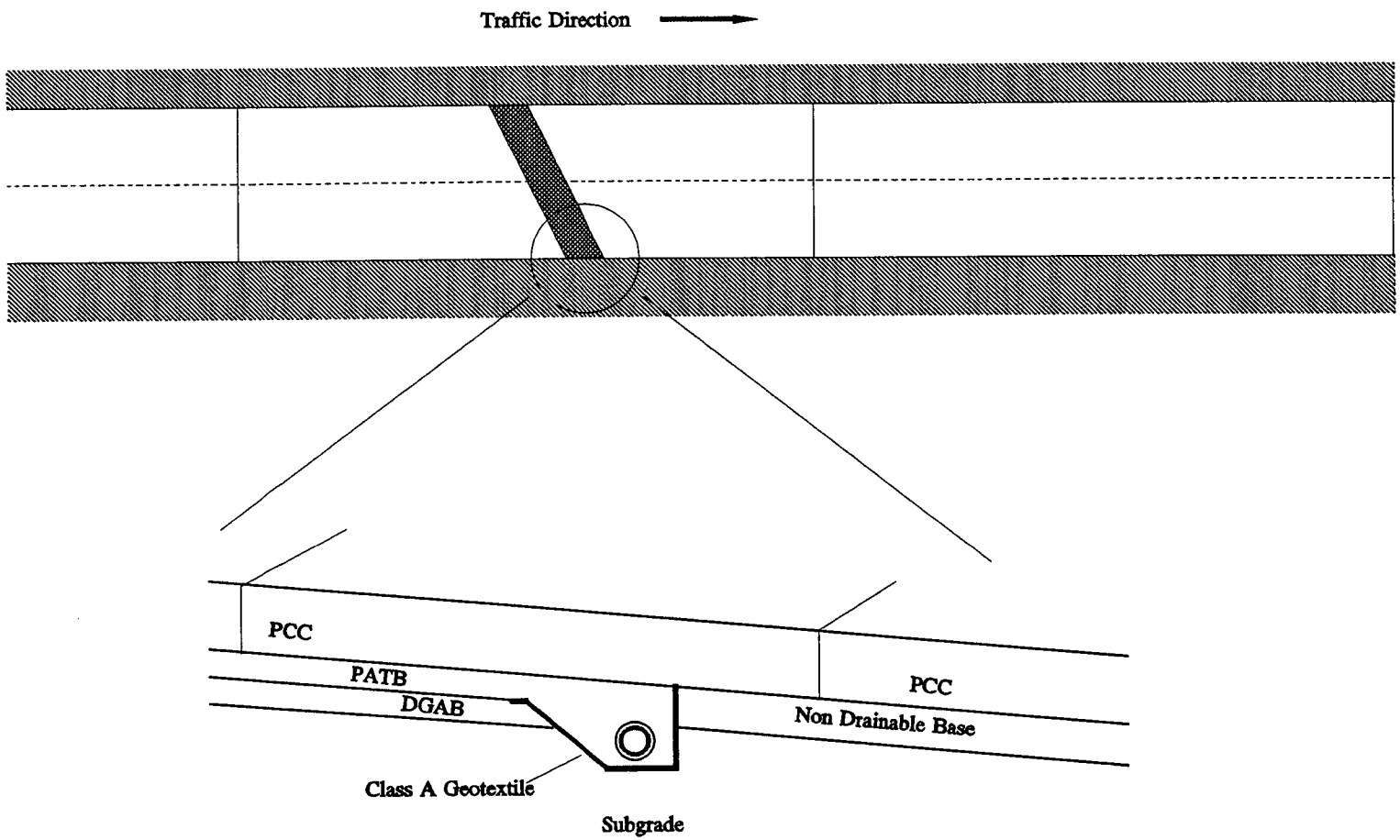

Legend

PCC = Portland cement concrete
PATB = Permeable asphalt - treated base
DGAB = Dense - graded aggregate base

Figure 6. Transverse interceptor drain.

The guidelines stipulate that edge drains be installed in the shoulders of those test sections constructed with a permeable asphalt-treated base to collect the water from the permeable base. Both outside and inside edge drains are required for crowned pavements, but only outside edge drains are required for sloped pavements. The edge drains should run continuously throughout the entire test section length and be located at the outer edge of the shoulders for new construction and at least 3 feet outside the edges for reconstruction projects. Slotted plastic pipes with a minimum 3-inch diameter are required for collector pipes. Discharge outlet pipes should be slotted rigid or plastic pipes with a minimum 3-inch diameter located at maximum intervals of 250 feet. Permeable asphalt-treated material is recommended as backfill material for the edge drain trench, but untreated open-graded material is also acceptable. Details of edge drains are illustrated in Figure 7.

Asphalt Concrete Mix Design and Materials

It was recognized by SHRP researchers and the highway agencies that it is not practical or feasible to specify the same HMAC mixture or mix design procedures for all test sites for this experiment. Therefore, to promote uniformity among test sites, the guidelines stipulate that the design of the asphaltic concrete mixture be performed in compliance with the guidelines contained in FHWA Technical Advisory T5040.27, *Asphalt Concrete Mix Design and Field Control*,[3] with the mix design criteria revision to conform to Asphalt Institute Manual MS-2, *Mix Design Methods for Asphalt Concrete and Other Hot-Mix Types.*[4] Target values for Marshall and Hveem properties are specified.

The guidelines stipulate the use of new materials that have not been used in previous construction; therefore, use of recycled asphalt materials for the test sections is excluded. A high-quality aggregate with a dense gradation is required. The aggregate should include at least 60% by weight crushed coarse aggregate with two fractured faces and a minimum sand equivalent of 45, as obtained following AASHTO T176, Plastic-Fines in Graded Aggregates and Soils by Use of the Sand Equivalent Test. The asphalt binder grade and characteristics should be selected following the participating agency's practice. Additives routinely used by the participating agency may be used, but experimental additives or modifiers are excluded.

The guidelines stipulate that construction of test sections be performed in a manner consistent with normal highway construction practice, with adequate attention given to the details and control of mix plant, hauling, placement, and compaction. Lift thickness is limited to a maximum of 4 inches with the longitudinal joints between successive lifts to be staggered to avoid vertical joints and to be located between adjacent lanes. The thickness of the surface course of HMAC mix, if used, should be the same for all test sections at the site. All transverse construction joints should be placed outside the test sections, e.g., within the transitions between test sections. The as-compacted asphalt concrete (surface plus binder course) should be constructed to within $\pm$ ¼ inch of the specified thickness. The as-constructed finished surface should have a prorated profile index of less than 10 inches per mile as measured by a California-type profilograph and evaluated using California Test 526.

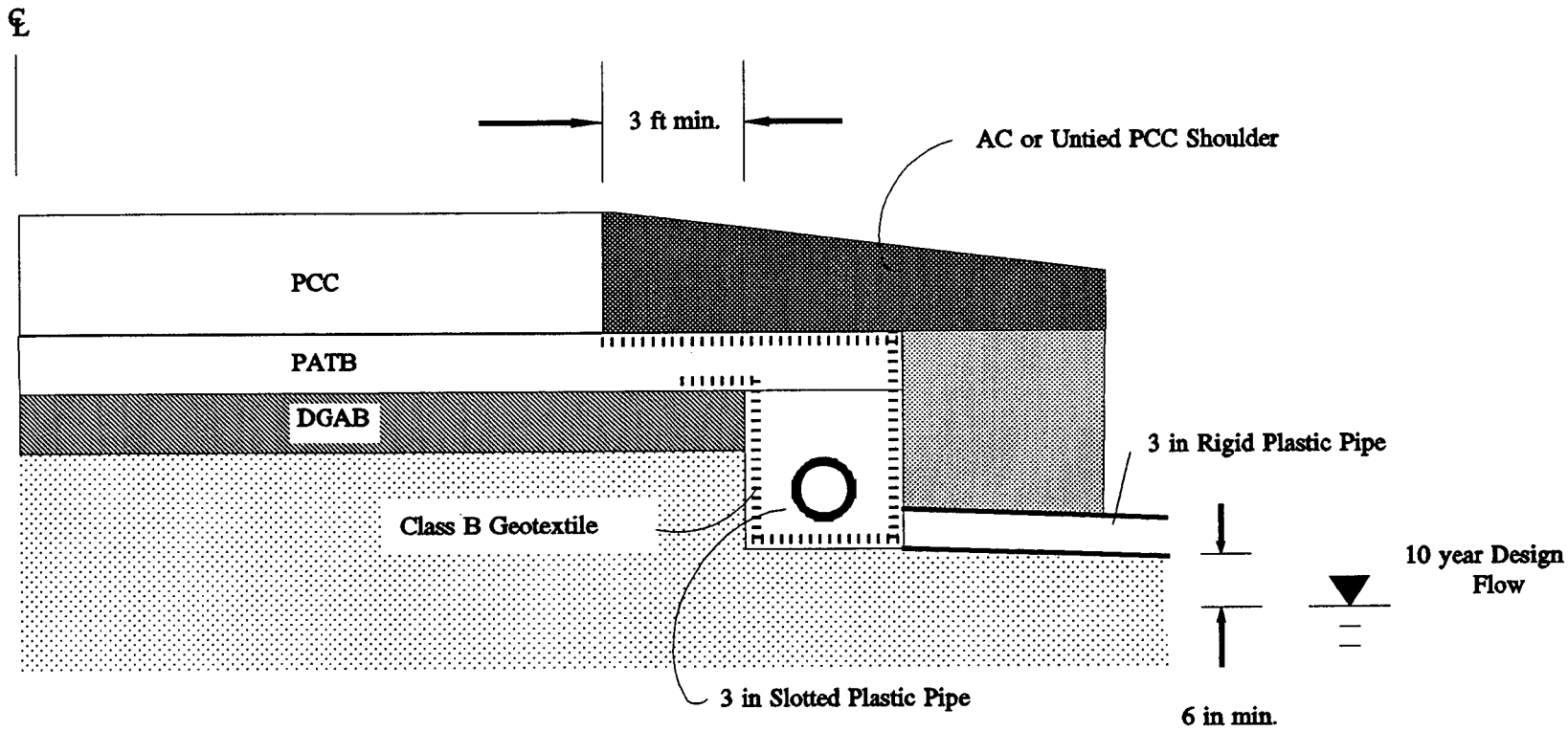

Legend

PCC = Portland cement concrete
PATB = Permeable asphalt - treated base
DGAB = Dense - graded aggregate base

Figure 7. Edge drain detail.

Other Considerations

In addition to detailed specifications pertaining to the materials and construction of the different pavement layers, the construction guidelines also address the aspects of shoulders, transitions, and other factors that may affect performance of the test sections.

For this experiment, the guidelines stipulate that the shoulders for new construction be at least 4 feet wide and have the full pavement structure across their width. For reconstruction projects, it is required that the new pavement structure extend a minimum of 3 feet outside the edge of the travel lane, with the shoulders partially constructed to grade. Also, when possible, paving of the shoulder together with the surface course to eliminate the longitudinal joint is recommended. Otherwise, the edge joint should be located at least 1 foot outside the pavement edge. In addition, curbs and gutters, if used, should be placed 10 feet away from the pavement edge.

The guidelines also stipulate that adequate transition lengths be provided between the test sections to allow changes in materials and thicknesses during construction. A minimum transition length of 100 feet has been recommended.

The guidelines highlight the need to minimize the time period between grading of an untreated layer and the placement of the overlying treated or surface layer. Also, if the untreated layer is exposed to rain, the layer should be dried to optimum moisture content (as specified in the design) and recompacted to the specified density. In addition, the guidelines stipulate that all test sections on a project be constructed in the same construction season.

Typical Cross Sections

The experiment on structural factors for flexible pavements requires the construction of 24 different pavement structures on different subgrade types at different locations. These pavement structures incorporate different combinations of asphalt concrete surface thickness, base materials, base thickness, and drainage systems. An important factor is the location of the drainage layer within the pavement structure. When used in combination with an untreated dense-graded aggregate base, the permeable asphalt-treated base layer is located above the untreated base, i.e., below the asphalt concrete surface. Also, when used in combination with a dense-graded asphalt-treated base, the permeable layer or the untreated aggregate base layer is located below the treated base, i.e., above the subgrade.

The type and thicknesses of the layers of the different pavement test sections are described in Chapter 2, Experiment Design. Figure 8 illustrates a typical cross section for test sections without drainage provisions. Figures 9 and 10 illustrate typical cross sections for test sections incorporating drainage provisions in combination with untreated dense-graded aggregate and asphalt-treated base layers, respectively. Of course, the details of cross sections at the test site may vary to accommodate site-specific conditions.

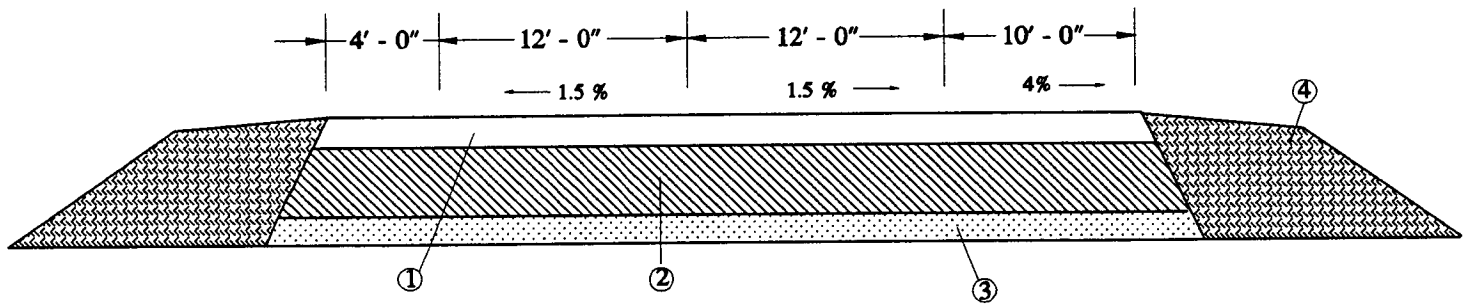

Legend

① Section 6. 7" hot-mix asphalt concrete (HMAC) surface/binder course
Section 18. 4" HMAC surface/binder course

② 8" Dense-graded asphalt-treated base

③ 4" Dense-graded aggregate base

④ Granular fill material

Figure 8. A test section without drainage provisions.

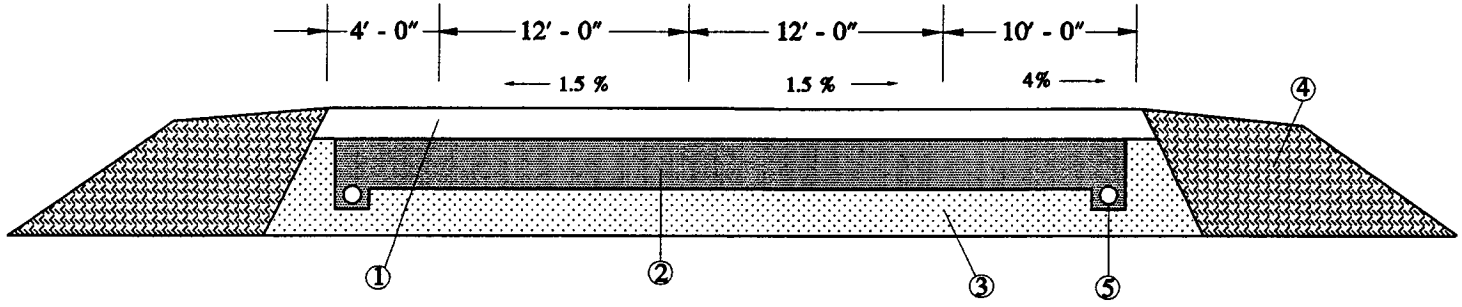

Legend

① Section 7. 4" hot-mix asphalt concrete (HMAC) surface/binder course
Section 19. 7" HMAC surface/binder course

② 4" Permeable asphalt-treated base

③ 4" Dense-graded aggregate base

④ Granular fill material

⑤ Filter fabric (Class B, trench only)

Figure 9. A test section with a granular base and drainage provisions.

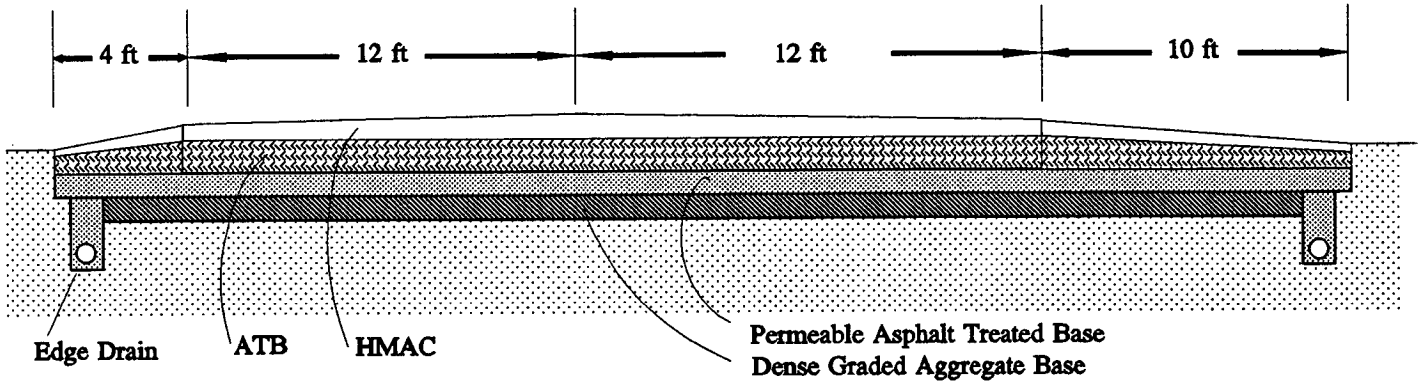

New Construction

Legend

ATB = Asphalt - treated base
HMAC = Hot - mix asphalt concrete

Figure 10. A test section with an asphalt concrete base and drainage provisions.

The guidelines also suggest that the test sections be arranged at the site in a manner that will allow construction expediency or other efficiencies, with consideration to the following items:

- Future rehabilitation needs - Placement of test sections with similar life expectancies adjacent to each other to facilitate future rehabilitation activities.

- Base material - Placement of test sections with similar base material adjacent to each other to minimize haul distances and to optimize plant runs of processed material.

- Drainage provisions - Placement of test sections with in-pavement drainage layers adjacent to each other to minimize transitions between drained and undrained pavement sections.

- Transitions - Placement of test sections with similar thicknesses or materials adjacent to each other to minimize the distance needed between sections to accommodate changes in thickness and material type.

Also, although a 500-foot length is required for monitoring, the test sections must be constructed as uniformly as is practical over a minimum length of 600 feet. This will allow 50 feet at each end for postconstruction materials sampling and other destructive testing without affecting the monitoring portion of the test section.

Structural Factors for Rigid Pavements

The experiment on structural factors for rigid pavements (SPS-2) addresses the effects of drainage, concrete thickness and strength, base type, and lane width on the performance of doweled jointed plain concrete pavements. The effects of some of these parameters on the performance of undoweled plain concrete pavements with skewed joints and on jointed reinforced concrete pavements are also addressed in coordinated supplemental experiments. Guidelines pertaining to these study factors were provided to ensure uniformity and consistency in construction.

Preparation and Compaction of Subgrade

The construction guidelines outline the requirements for preparation and compaction of the subgrade. These requirements are the same as those described for the experiment on structural factors for flexible pavements.

Dense-Graded Aggregate Base

The requirements for the dense-graded aggregate base are essentially the same as those described for the dense-graded aggregate base for the experiment on structural factors for flexible pavements (SPS-1). However, the experiment design stipulates that lift thickness after compaction should be 6 and 4 inches for the test sections constructed without and with a permeable layer, respectively. Also, the dense-graded aggregate should be kept uniformly moist prior to the placement of the portland cement concrete surface layer, using a procedure that will avoid formation of mud or pools of water.

Lean Concrete Base

The lean concrete base material consists of a mixture of aggregate, hydraulic cement, water, and admixtures. The variability in specifications used by the different highway agencies makes it impractical to specify the same materials or mix design for all test sections. Therefore, the construction guidelines stipulate the use of the participating agency's procedures and specifications for the production and placement of the base but recommend the use of the slip-form method of concrete placement. The general requirements for the lean concrete base are as follows:

- Compressive strength at 7 days: 500 psi (750 psi maximum).
- Slump (slip-form paving): 1 to 3 inches.
- Air content: 4-9%.

The guidelines stipulate the use of Type I and Type II cement conforming to AASHTO Specification for Portland Cement (M85) and coarse aggregate conforming to AASHTO Specification for Coarse Aggregate for Portland Cement Concrete (M80) and recommends AASHTO Size No. 57.

Thickness of the lean concrete base is to be 6 inches, as stipulated in the experiment design. For new construction, the lean concrete base layer should be constructed for the full width of the travel lanes plus the width of the inside and outside shoulders. For sections built as part of reconstruction projects, the base should be placed to a width not less than 3 feet outside the edges of the travel lanes. Curing should be provided with a wax-based curing compound conforming to AASHTO Specification for Liquid Membrane-Forming Compounds for Curing Concrete (M148), Type 2 white pigmented. A first coat should be applied immediately after placement at a rate of 1 gallon per 100 square feet, with a second coat to be applied at a rate of 1 gallon per 150 square feet within 24 hours prior to placement of the portland cement concrete surface layer. The base layer should be finished to a smooth surface without texturing, and the surface should be free from mortar ridges or other projections prior to application of the curing compound. Finished elevations and surface irregularities should be measured in the same manner and limited to the tolerances described for the dense-graded aggregate base. If the lean concrete base is constructed with a width greater than 26 feet, a longitudinal joint should be provided with an offset of not more than 3 feet from the center line of the paved width. Traffic should not be allowed on the lean concrete base.

Drained Base Structure

The drained base structure of this experiment is similar to that described for the experiment on structural factors for flexible pavements and consists of a permeable asphalt-treated base layer and edge drains. The 4-inch-thick permeable asphalt-treated base should be placed on a 4-inch-thick dense-graded aggregate base. The permeable and dense-graded aggregate base layers, edge drains, and transverse interceptor drains should be constructed with materials and following the procedures described for those required for the experiment on structural factors for flexible pavements. Filter fabric (or geotextile) should be used only in the edge drains and transverse interceptor drains.

Portland Cement Concrete and Other Materials

The quality of the as-delivered and as-placed concrete and the subsequent strength development are critical factors in pavement performance. Although only flexural strength is normally considered in evaluating the structural behavior of concrete pavements, durability-related properties, such as entrained air content, aggregate type, and degree of consolidation, also influence the long-term performance of the pavement. The guidelines identify those items that should be considered in developing the mix design and placement of the concrete on the test sections.

The guidelines stipulate that the concrete mixture be designed according to the procedures and specifications followed by the participating agency and recommend the use of the slip-form method for concrete placement. The general requirements for the portland cement concrete are as follows:

- Flexural strength: 550 or 900 psi average at 14 days.
- Slump (slip-form paving): 1 to 2½ inches.
- Air content: 6½ ± 1½% for freeze-thaw areas.

The 550-psi flexural strength level is considered standard and readily available. For the higher strength level, the guidelines stipulate the conduct of well-planned laboratory testing of trial mixes to obtain the desired concrete mixture. The guidelines outline such a testing plan and identify a range of acceptable deviations depending on the number of trial mix batches and test samples. Also, concrete materials must conform to certain requirements to ensure consistency in concrete quality at the different sites.

The experiment stipulates the use of Type I or Type II portland cement that meets the requirements of AASHTO Specification for Portland Cement (M85). A portion of the portland cement, not exceeding 15% of the weight of the cement, may be substituted with Class C or Class F fly ash meeting the agency's requirements.

The coarse aggregate should consist of crushed gravel or crushed stone particles meeting the requirements of AASHTO Specification for Coarse Aggregate for Portland Cement Concrete (M80). Gradation conforming to Size No. 57, as identified in AASHTO Specification for

Sizes of Aggregate for Road and Bridge Construction (M43), has been recommended. The coarse aggregate must be obtained from a source approved by the agency and be reasonably free from deleterious substances such as chert, gypsum, iron sulphate, amorphous silica, and hydrated iron oxide. Coarse aggregate containing materials that are deleteriously reactive with alkalis in the cement in amounts that cause excessive expansion of mortar or concrete should be avoided or used with low-alkali cement or other materials that have been shown to prevent harmful expansion, as determined by potential reactivity tests.

The fine aggregate should consist of natural sand, manufactured sand, stone screenings, slag screenings, or a combination thereof and should meet the requirements of AASHTO Specification for Fine Aggregate for Portland Cement Concrete (M6). A fineness modulus between 2.3 and 3.1 is required.

The guidelines stipulate that other items used in the production of concrete, such as water and admixtures, conform to the requirements normally specified by the agency for interstate concrete pavement construction. The use of microsilica (silica fume) or additives to accelerate strength gain of the concrete is not permitted.

For the doweled transverse joints, epoxy-coated 18-inch-long dowels are required at a 12-inch spacing. Dowel diameters should be 1¼ and 1½ inch for the 8-inch and 11-inch thick pavement sections, respectively. The dowels should conform to the requirements of AASHTO Specification for Corrosion Resistant Coated Dowel Bars (M254) and should be placed at slab mid-depth and aligned parallel to the longitudinal direction of the lane, i.e., perpendicular to the joint.

The longitudinal joints should be tied using 30-inch-long, No. 5 epoxy-coated deformed steel bars of grade 40 steel. The tie bars should be spaced 30 inches center to center and placed at slab mid-depth perpendicular to the longitudinal joint.

For the jointed reinforced concrete test sections, steel reinforcement of 0.15% should be provided with welded steel wire fabric conforming to the requirements of AASHTO Specification for Steel Welded Wire, Fabric, Plain, for Concrete Reinforcement (M55) or AASHTO Specification for Welded Deformed Steel Wire Fabric for Concrete Reinforcement (M221). The 6x12 - W7xW7 and 6x12 - W10xW10 types have been recommended for the 8- and 11-inch-thick pavements, respectively.

Concrete Pavement Construction Operations

The construction guidelines stipulate that the test sections be constructed following the practices and specifications that have proven successful for the participating highway agency. The use of slip-form equipment to spread, consolidate, screed, and float-finish the concrete to produce a well-consolidated and homogeneous pavement has been recommended. The machine should vibrate the concrete for the full width and depth of the concrete. Internal spud-type vibrators should be used at a spacing of not more than 24 inches. Slip-forming of the test lane and adjacent lane in one operation is desired.

For the test sections of doweled jointed concrete pavement, transverse contraction joints with dowel bars are required at a spacing of 15 feet for the plain sections and 30 feet for the reinforced sections. The joints should be sawed perpendicular to the longitudinal direction of the pavement. At these joints, dowels should be provided, using basket assemblies or dowel bar inserters; the dowels should be placed at pavement mid-depth and properly aligned. The dowel baskets, if used, should be secured to the base layer. The dowels should be lightly coated with grease, liquid asphalt, or other suitable lubricant over their entire length to prevent bonding of the dowel to the concrete. For the test sections of undoweled plain concrete pavement with skewed joints, joints with a skew of 2 feet in 12 feet, right hand forward in the travel direction, are provided at a variable spacing of 12, 15, 13, and 14 feet.

All transverse construction and longitudinal joints should be sawed with an initial saw cut of one-third the slab thickness, preferably using a blade up to ⅜ inch wide. A second sawcut is required to provide a sealant reservoir ⅜ inch wide by 1 inch deep. Plastic inserts should not be used to form the joints. Tie bars at the longitudinal joints should be placed perpendicular to the joint at pavement mid-depth. Joint sawing should begin as soon as the concrete is strong enough both to support the sawing equipment and to prevent excessive raveling of the concrete surface and should be completed within 24 hours of placement and before opening to traffic. Silicone sealant is required. Experimental sealants and field-poured liquid sealants are excluded.

For the reinforced test sections, the steel reinforcement should be provided over the length of each slab panel up to 2 feet from each transverse joint and center-line longitudinal joint. Laps should be at least 12 inches long but not less than 30 times the diameter of the longitudinal wire or bar. Reinforcing steel should be placed at mid-depth.

The guidelines stipulate the use of liquid curing compound that should be applied to the concrete surface within 15 minutes after surface texturing but no later than 45 minutes after concrete placement. Surface texturing, curing compound type, and application rate should follow the agency's practice and specifications.

The guidelines highlight the importance of achieving a slab thickness as close to the target values of 8 and 11 inches as possible. Cores as well as rod and level survey elevation changes before and after concrete placement should be used to establish the as-placed concrete thickness, which should be within ¼ inch of the target value. The location of elevation measurements that should be taken at 50-foot intervals is illustrated in Figure 5. The guidelines require that the finished pavement be tested for smoothness in both wheel paths parallel to each edge of the pavement by a California-type profilograph. The prorated profile index should be less than 10 inches per mile over the test sections when evaluated using California Test 526. Also, high pavement areas with a vertical deviation greater than 0.4 inch in 25 feet should be removed by diamond grinding or multiple-saw devices as approved by the agency.

Other Considerations

In addition to detailed specifications pertaining to the materials and construction of the different pavement layers, the construction guidelines also address those aspects pertaining to shoulders, transitions, opening to traffic, repair of defective slabs, and other factors that may affect the performance of the test sections.

For this experiment, the guidelines stipulate that asphalt concrete or portland cement concrete shoulders not be tied to the mainline pavement of the test sections. In addition, the longitudinal joint between the mainline concrete pavement and the shoulders should be sealed. Also, the guidelines stipulate that transitions of adequate lengths be provided between the test sections to accommodate changes in mix design, slab thickness, or base type with minimal effect on the properties of the finished pavement. A minimum transition length of 100 feet has been recommended. For the widened lanes, a solid white line should be painted to delineate the 12-foot-wide travel portion of the lanes.

The guidelines require that structural repairs be performed on pavement slabs that exhibit cracking before test sections are opened to traffic. Also, slab panels that are damaged and cannot be adequately repaired must be removed and replaced before opening to traffic. The test sections should be opened to traffic not earlier than 7 days after concrete placement and after the concrete flexural strength has reached 550 psi. In addition, all joint sealing must be completed prior to opening to traffic.

Typical Cross Sections

The experiment on structural factors for rigid pavements requires the construction of 24 different pavement structures on different subgrade types at different locations. These pavement structures incorporate different combinations of portland cement concrete surface thickness and strength, base material, lane width, and drainage systems. The type and thickness of the different layers, as well as the concrete strength and lane width of the different pavement test sections, are described in Chapter 2, Experiment Design. Figures 11 and 12 illustrate typical cross sections for test sections without and with drainage provisions, respectively. Of course, the details of the cross sections at the test site may vary to accommodate site-specific conditions.

As for the other experiments, it is recommended that the test sections be constructed as uniformly as is practical over a minimum length of 600 feet. This will allow 50 feet at each end for postconstruction materials sampling and other destructive testing without affecting the 500-foot long monitoring portion of the section.

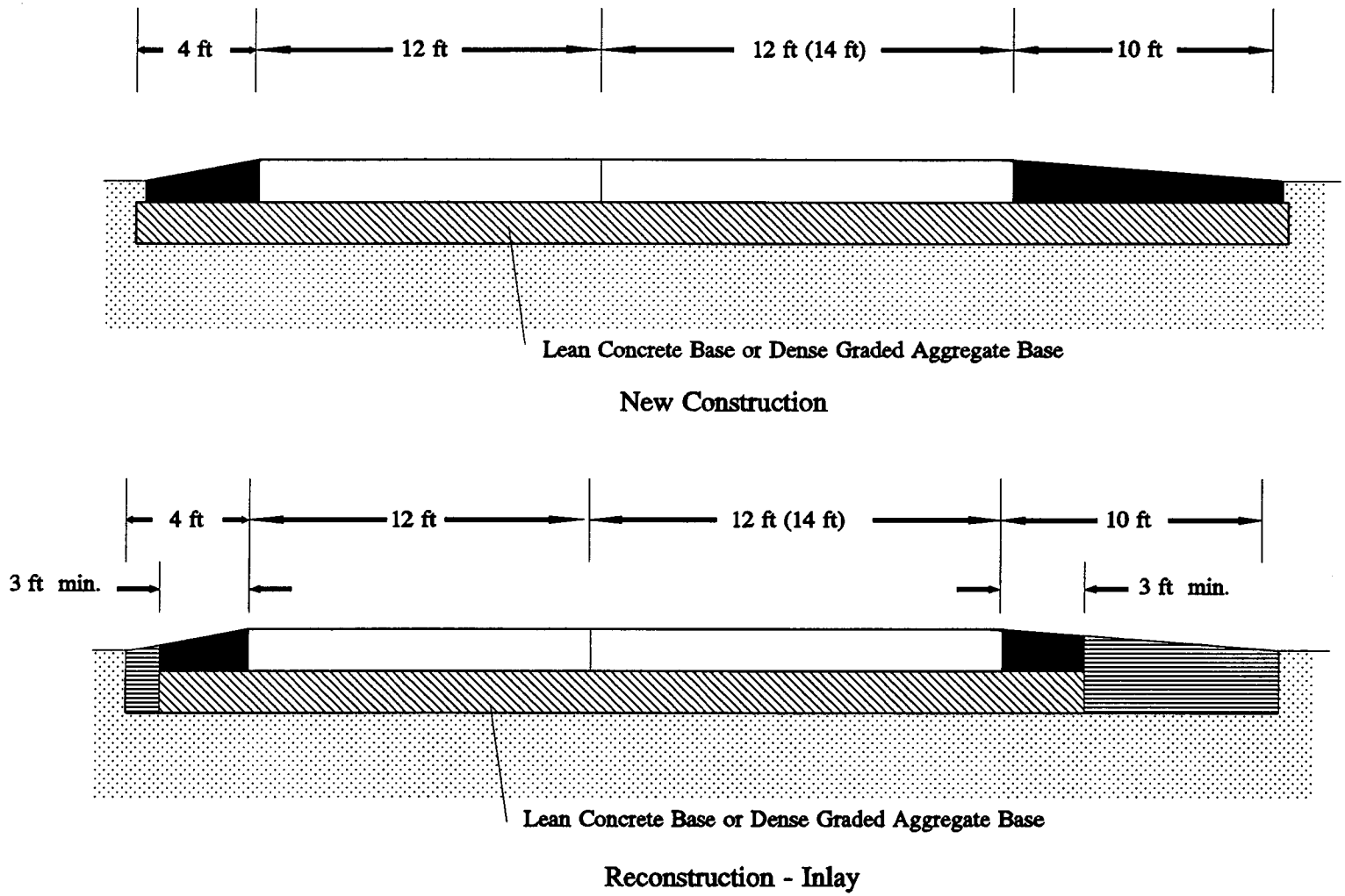

Figure 11. A test section without drainage provisions.

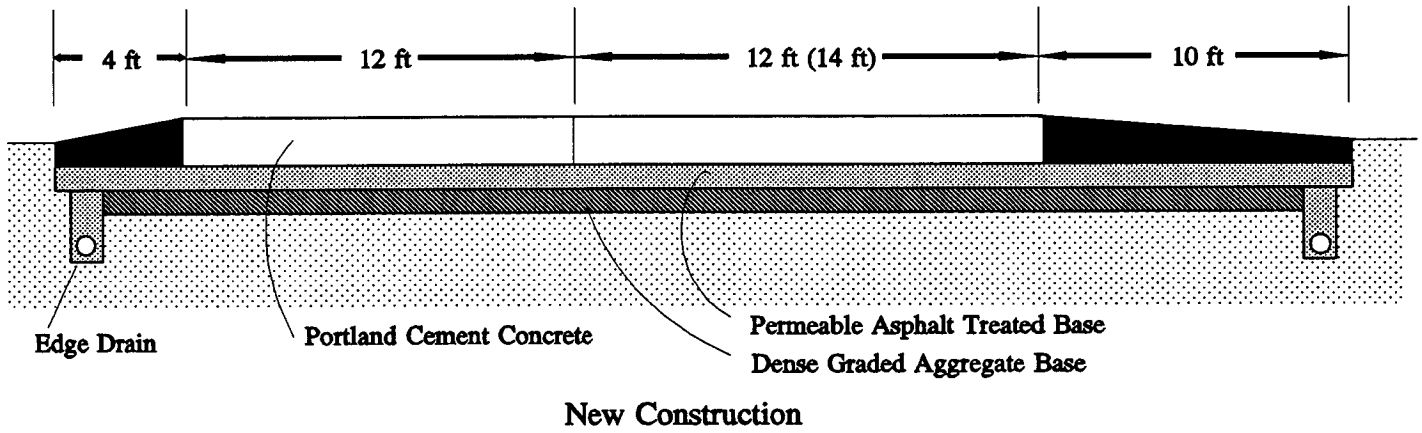

Figure 12. **A test section with a widened lane and drainage provisions.**

Preventive Maintenance Effectiveness of Flexible Pavements

The experiment on preventive maintenance effectiveness of flexible pavements (SPS-3) addresses the effects of different maintenance treatments on pavement performance. All test sites for this experiment have been constructed. The treatments included in this experiment are crack sealing, chip seals, slurry seals, and thin overlays. For comparison, a control test section that remains untreated is included in each test site. For each SHRP region, a single contractor was selected to perform the chip seal, crack seal, and slurry seal treatments on all test sections in that region following the specifications developed for that region. Each participating agency was responsible for the surface preparation of the test sections and construction of the remaining treatments, including thin overlays and agency supplemental test sections. The specifications, data collection requirements, and test plans were provided by regional task groups composed of representatives of the participating agencies. These groups provided coordination between the participating agencies to promote consistency among the projects.

Pavement Preparation and Maintenance Treatments

Surface preparation prior to the application of maintenance treatments consisted of power brooming of the pavement surface. The participating agency's practice was followed for preparation of test sections prior to overlay placement. No special requirements were stipulated for the surface preparation of the test sections.

Crack Sealing

The guidelines stipulate that all cracks that are ⅛ inch wide or more and at least 12 inches in length should be sealed. Cracks less than ¾ inch in width should be routed to a width of ¾ inch and a depth of 1 inch. Cracks wider than ¾ inch should be cleaned and sealed. Cleaning was required for all cracks to be sealed with a hot compressed air lance. The guidelines stipulate that the sealant be placed within 2 minutes of heating or crack cleaning.

Chip Seals

The guidelines stipulate the use of a chip seal treatment consisting of an emulsified asphalt cement and crushed gravel or crushed stone, with 100% passing the ½-inch sieve and less than 10% passing the No. 10 sieve. A CRS-2 asphalt emulsion was specified for all SHRP regions. However, anionic (RS-2) and high-float (FHRS-2) emulsions were also allowed in the North Atlantic region. Application rates were typically on the order of 0.25 to 0.45 gallons per square yard with aggregate coverage of approximately 20 to 40 pounds per square yard. The guidelines stipulate that the aggregate be placed within a short time (1 to 2 minutes) after application of the asphalt emulsion and that the aggregate surface be rolled within 3 minutes of aggregate spreading, using three coverages of the surface with the final

pass in the direction of traffic and a roller speed not to exceed 5 miles per hour. Also, sweeping of the surface using a power broom to remove loose aggregate was required prior to opening to traffic.

Slurry Seals

The slurry seal treatment for test sections had a single set of requirements, with the actual mix design to be finalized for locally available materials by one of a specified group of testing laboratories. Some specific requirements of these designs included a maximum setting time to allow opening to traffic within 2 hours, a range of residual asphalt contents, application rate of 15 to 20 pounds per square yard, and tolerances for aggregate gradation.

Thin Overlays

The guidelines stipulate that thin overlays be placed with a thickness between ¾ and 1½ inches, depending on agency practice. The participating agencies were responsible for all aspects of the thin overlay treatment including the mix design and construction. However, it was requested that mix used for the test sections conform as much as possible with suggested guide specifications provided by SHRP.

Other Considerations

The experiment requires that each test section be at least 600 feet long. This will allow 500 feet for monitoring purposes and an additional 50 feet at each section end for posttreatment sampling and other destructive testing without affecting the 500-foot-long monitoring portion of the test section. Transitions between the test sections should be at least 100 feet long.

Preventive Maintenance Effectiveness of Rigid Pavements

The experiment on preventive maintenance effectiveness of rigid pavements (SPS-4) addresses the effects of different maintenance treatments on pavement performance. All test sites for this experiment have been constructed or were scheduled for construction in 1992. The treatments included in this experiment are joint and crack cleaning and resealing and undersealing. For comparison, a control test section that remains untreated is included in each test site. It was not required that the test sections incorporating crack seal and underseal treatments be constructed at the same site. Therefore, some test sites included both treatments while other sites included only one of the two treatments. Each participating agency was responsible for surface preparation and construction of the test sections, including any supplemental test sections. Guide specifications for these treatments were provided to the agencies. The specifications, data collection requirements, and test plans

were provided by regional task groups composed of representatives of the participating agencies. These groups provided coordination between the participating agencies to promote consistency among the projects.

Pavement Preparation Prior to Maintenance Treatments

The guidelines stipulated that surface preparation prior to the application of the maintenance treatments be performed according to the participating agency's practice. However, unsealed joints were required for the control section. Therefore, the existing joint sealant materials were removed, and for newly constructed test sections, no sealant was installed. No other special requirements were stipulated for this experiment.

Joint and Crack Sealing

The joint and crack sealing of the test sections required that any existing sealant and blocking material be removed, joint and crack faces cleaned, and new backer material and sealant placed. Sealant specified for this experiment consisted of low-modulus silicone, either tooled or self-leveling, for concrete-to-concrete joints, and hot-poured asphalt material for joints with asphalt concrete shoulders.

Sealant in existing joints was removed with a concrete saw. To ensure that joint faces were free of old sealant, additional saw cutting was specified to reface the joints as necessary. A high-pressure oil-free air blast was then required to remove cuttings and debris, followed by sandblasting and cleaning with a high-pressure water jet and finally by a high-pressure oil-free air blast. For joints between asphalt and concrete, a hot compressed air lance was used to heat the asphalt prior to application of the sealant. Separating and blocking media were inserted in the joint groove to prevent entrance of the sealant below the specified depth. A backer material, compatible with the sealant and properly sized for the width of the joint, was required.

Cleaning and sealing of cracks was performed in the same manner as for joints. Crack sealing and resealing were required for cracks that were previously sealed and for unsealed cracks that were ⅛ inch or wider.

Undersealing

Undersealing is performed in this experiment to fill voids beneath the pavement with a cement-fly ash grout without raising the slabs. Grout is injected by pumping grout under pressure into a series of core holes placed on either side of transverse joints. Slab elevation is monitored during injection to prevent lifting. A Benkelman Beam device is used to monitor slab uplift and also for stability testing after completion of the specified curing period. Unsatisfactory stability requires that additional grouting be performed to achieve an acceptable level.

Other Considerations

The experiment requires that each test section be at least 600 feet long. This will allow 500 feet for monitoring purposes and additional 50 feet at each section end for posttreatment sampling and other destructive testing without affecting the 500-foot long monitoring portion of the test section. Transitions between the test sections should include at least two slabs.

Rehabilitation of Asphalt Concrete Pavements

The experiment on rehabilitation of asphalt concrete pavements (SPS-5) addresses the effects of surface preparation prior to overlay, type of asphalt overlay (virgin and recycled), and overlay thickness on the performance of the rehabilitated asphalt concrete pavement. Guidelines pertaining to these study factors were provided to ensure uniformity and consistency among test sites.

Maintenance of Control Section

The guidelines stipulate that repairs and treatments on the control section be limited to those maintenance activities needed to keep the test section in safe and functional condition. These maintenance activities include crack sealing, isolated pavement repairs, and seal coat application and should be performed in accordance with the participating agency's procedures and practices. However, it is recommended that the application of seal coats as part of the routine maintenance activities not be performed in the first year of the study to allow monitoring of the change in pavement condition during this period. Also, the schedule for seal coat application should be coordinated with SHRP regional offices to allow monitoring of the test site and documentation of pavement condition prior to application of the treatment. The control section will no longer be considered part of the experiment if maintenance, restoration, or rehabilitation treatments that affect the structural response or performance of the pavement are applied. Milling, undersealing, resurfacing, and installation of retrofitted underdrains or edge drains are examples of treatments that would cause removal of the control section from the experiment.

Pavement Preparation Prior to Overlay

The experiment evaluates the effects of two levels of pavement preparation, minimal and intensive, on performance of the rehabilitated pavement. Treatment options considered for the test sections include patching, crack sealing, leveling, and milling. The guidelines stipulate the types of treatments that should be performed for each level of preparation.

Minimal Preparation

The minimal level of pavement preparation consists primarily of patching severely distressed areas and potholes and placing leveling course in ruts that are at least 2 inches deep. Also, milling to remove an existing open-graded friction course may be performed.

The guidelines stipulate that localized areas that exhibit severe levels of fatigue cracking, potholes, depressions more than 1 inch deep, or cracks wider than ¾ inch be repaired with patches. The deteriorated loose material should be removed to the depth and width necessary to reach good material. The edges of the prepared patch area should be nearly vertical and should be treated with a tack coat prior to filling with a dense-graded HMAC patching mixture. The material should be placed in lifts and compacted flush with the surface, using a mechanical compactor suitable for the size of the patch. The temperature of the compacted mix should be low enough prior to placement of the overlay or opening the patch to traffic.

For the minimal level of pavement preparation, the guidelines stipulate that no crack sealing be performed on the test sections just prior to overlay placement. Therefore, crack sealing should be performed as a maintenance activity far enough in advance of overlay placement. However, cracks wider than ¾ inch should be patched.

Ruts that are more than ½ deep should be leveled with an asphaltic concrete leveling course. The leveling material should be HMAC with a ½-inch top size aggregate. The material should be placed within the depressed rut areas and compacted with pneumatic roller equipment.

The guidelines stipulate that an existing surface friction course with a thickness of less than 1 inch may be removed by milling if prior experience indicates a potential for stripping or adverse effects on the performance of the resurfaced pavement. The milling operation should be performed to remove only the friction course and only when the participating agency considers it essential.

Intensive Preparation

The intensive level of pavement preparation includes milling, patching of distressed areas and potholes, and crack sealing.

The guidelines stipulate that milling of the pavement surface be performed on all test sections designated for intensive preparation. Milling should be performed to a depth of 1½ to 2 inches to remove oxidized or stripped material from the surface and to correct transverse distortion caused by rutting. This milling is required in addition to other milling that may be needed to remove an existing surface friction course. The milled depth should be selected so that the final milled surface is at least ½ inch above or below an interface between material layers.

The milling equipment should be capable of maintaining accurate depth of cut, profile, and cross slope and providing positive, definitive grade control. The cutting edge should have a minimum width of 6 feet and be capable of full-drum-width milling. The equipment should be operated to provide a uniform texture with no ridges or low spots and to minimize tearing or breaking of the underlying or adjacent pavement surface. Milled material should be loaded directly from the milling machine and removed.

The milling operation should be performed to restore the transverse cross slope to the initial specifications or to specifications considered acceptable by agency standards. Full-depth milling should extend at least 25 feet into the transition zones at the ends of the test section. The milled surface should be cleaned with a power broom prior to any repairs or application of a tack coat.

The guidelines stipulate that the depth of material removed by milling, excluding any surface friction courses removed, be replaced with an equal thickness of an asphalt concrete of the same material intended for the overlay. The depth of the replacement material should not be counted as part of the overlay thickness specified for the test section. The refill material in the milled area should be properly compacted.

For patching as part of the intensive level of pavement preparation, the guidelines stipulate the same requirements given for the minimal level of preparation. In addition, the guidelines stipulate that full-depth patching be performed after milling at locations exhibiting potholes, severe cracking, or distress. Further, cracks existing after milling that are more than ¾ inch wide should be patched. The surface of the patch should be level with the surrounding surface.

Asphalt Concrete Overlay

The experiment design stipulates the use of HMAC overlays for all test sections. However, mixtures composed of all virgin (all new) materials are required for some test sections, and mixtures containing a portion of recycled asphalt concrete materials are required for other test sections. To promote uniformity between test sites, the guidelines stipulate that the design of the asphaltic concrete mixtures should be performed in accordance with the guidelines contained in FHWA Technical Advisory T5040.27, *Asphalt Concrete Mix Design and Field Control*[3] with the mix design criteria revision to conform to Asphalt Institute Manual MS-2, *Mix Design Methods for Asphalt Concrete and Other Hot-Mix Types.*[4] Target values for Marshall, Hveem, and void properties are specified.

For the asphalt concrete designated as "virgin," the guidelines stipulate the use of aggregates, asphalt cement, and additives having properties similar to those described for the asphalt concrete surface layer used for the experiment on structural factors for flexible pavements (SPS-1).

For the asphaltic concrete containing recycled asphalt concrete materials, the guidelines stipulate that the mixture contain 30% recycled asphalt pavement (RAP) with the balance to be new aggregates conforming to the requirements outlined for the virgin asphalt mix. The RAP material should be free of organic or deleterious material and have no history of stripping or high abrasion.

Of the reclaimed coarse aggregate material, 100% should pass the 1½-inch sieve and a maximum of 25% should pass the ⅜-inch sieve. Of the reclaimed crushed fines, 100% should pass the ¾-inch sieve and no more than 25% should be retained on the ⅜-inch sieve. Measurement of the composition of the RAP material, including gradation, asphalt content, asphalt viscosity, and penetration, should be performed for proper mix design. New aggregates used in the mix should conform to the requirements stipulated for the virgin mix. Only asphalt cement, preferably obtained from the same source or supplier as that used in the virgin mix, should be added as a binder in the recycled mix, and rejuvenating agents should not be used.

The guidelines stipulate that overlay placement be performed in a manner consistent with normal highway construction practice, with adequate attention given to the details and control of mix plant, hauling, placing, and compaction. Lift thickness should be limited to 3 inches. The thickness of a surface course of HMAC mix, if used, should be the same for all test sections at the site. All transverse construction joints should be placed outside the test sections and longitudinal joints should be located within 1 foot of the center of a lane or the center of adjacent lanes. The as-compacted thickness of the asphalt concrete overlay (surface plus binder course) should be constructed to within + ¼ inch of the specified thickness. The as-constructed finished surface of the overlay should have a prorated profile index of less than 10 inches per mile as measured by a California-type profilograph and evaluated using California Test 526.

Other Considerations

In addition to detailed specifications pertaining to surface preparation and overlay materials and placement, the construction guidelines also address the aspects of shoulders, maintenance activities, lane additions and widening, and other factors that may affect performance of the test sections.

For this experiment, the guidelines exclude certain factors that are not part of the study and that would alter the characteristics or rate of deterioration of the pavement. Widening of test lanes, use of geotextiles, retrofitting of edge drains, and addition of outside lanes should not be performed on the test sections. Also, the application of seal coats as part of surface preparation prior to the placement of overlay is not recommended. The addition of outside shoulders is acceptable provided that they are not integral with the study lane and do not act as a widened lane.

The guidelines stipulate that a surface friction course may be used on the test sections if it is required by the participating agency. However, the thickness should be limited to ¾ inch and the surface friction course should not be considered as part of the overlay thickness specified for the section. Also, the application of seal coats to control sections exhibiting stripping is acceptable if it is the agency's practice for such conditions. Severe raveling associated with stripping should be repaired with a surface patch for the test sections requiring minimal preparation or removed by milling for the test sections requiring intensive preparation.

Typical Cross Sections

The experiment on rehabilitation of asphalt concrete pavements requires the construction of eight different test sections at different locations. These test sections incorporate different combinations of surface preparation, asphalt concrete overlay materials, and asphalt concrete overlay thickness. The type and thickness of the overlay and the surface preparation level of the different test sections are described in Chapter 2, Experiment Design. In addition, a nonoverlaid control section that receives only routine maintenance is included in each test site for comparison.

Figure 13 illustrates a typical cross section of the pavement prior to rehabilitation and also the control section. Figures 14 and 15 illustrate typical cross sections for test sections rehabilitated with minimal surface preparation and overlays of 2 and 5 inches, respectively. The 2-inch-thick overlay was assumed to be placed in one lift, while the 5-inch-thick overlay was assumed to consist of a 2-inch-thick surface course and two 1½-inch-thick lifts. Figure 16 illustrates a test section that involved intensive preparation and milling and removal of the upper 2 inches, which consisted of the existing surface course and ½ inch of the binder course. The milled thickness was replaced with an equal thickness of 2 inches of binder course material. Figure 17 shows the details of shoulder joints for those sections requiring minimal surface preparation (i.e., no milling).

The experiment requires that each section be constructed as uniformly as is practical over a minimum length of 600 feet. This will allow 500 feet for monitoring purposes and an additional 50 feet at each section end for postoverlay sampling and other destructive testing without affecting the monitoring portion of the test section.

Rehabilitation of Jointed Portland Cement Concrete Pavements

The experiment on rehabilitation of jointed portland cement concrete pavements (SPS-6) addresses the effects of restoration with and without an asphalt concrete overlay, crack/break and seat with different asphalt concrete overlays, and sawed and sealed joints in the asphalt overlay on the performance of the rehabilitated jointed concrete pavement. The experiment addresses the effects of these rehabilitation options on both jointed plain and jointed reinforced concrete pavements. Guidelines pertaining to these study factors were provided to ensure uniformity and consistency between test sites.

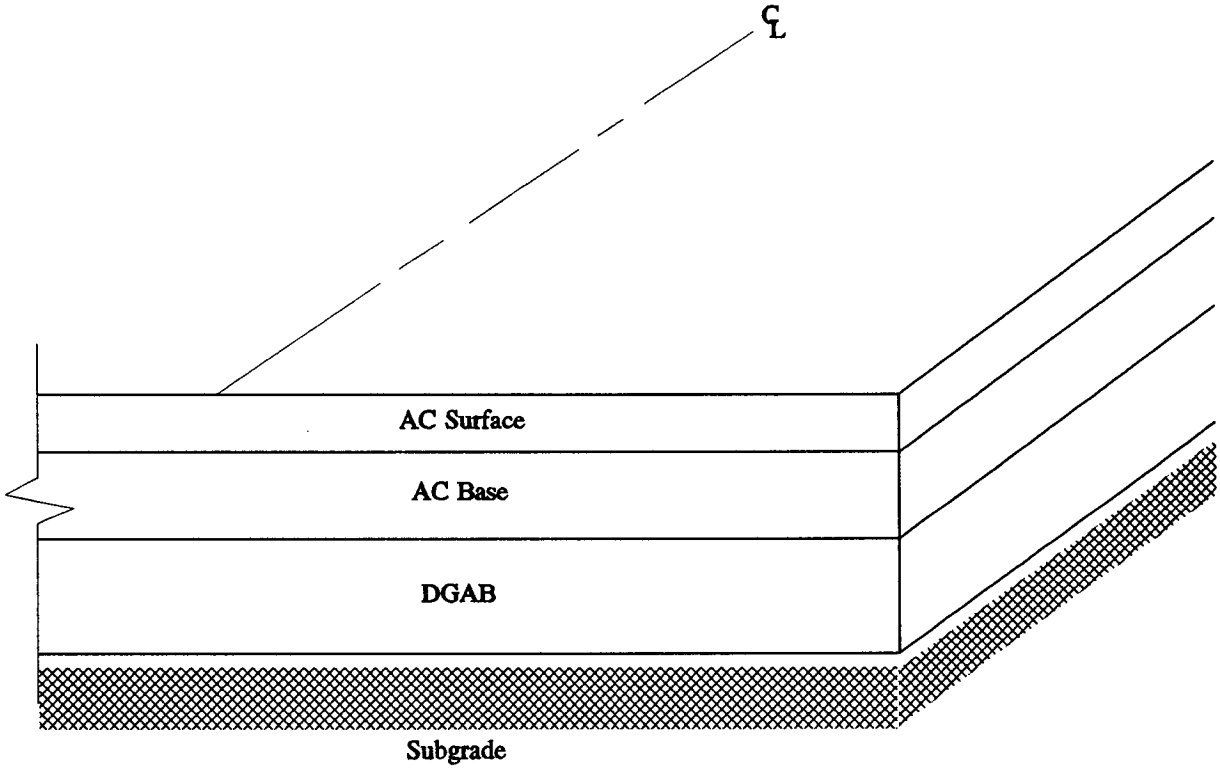

Legend

AC = Asphalt concrete
DGAB = Dense - graded aggregate base

Figure 13. Example of pavement layers for a candidate project.

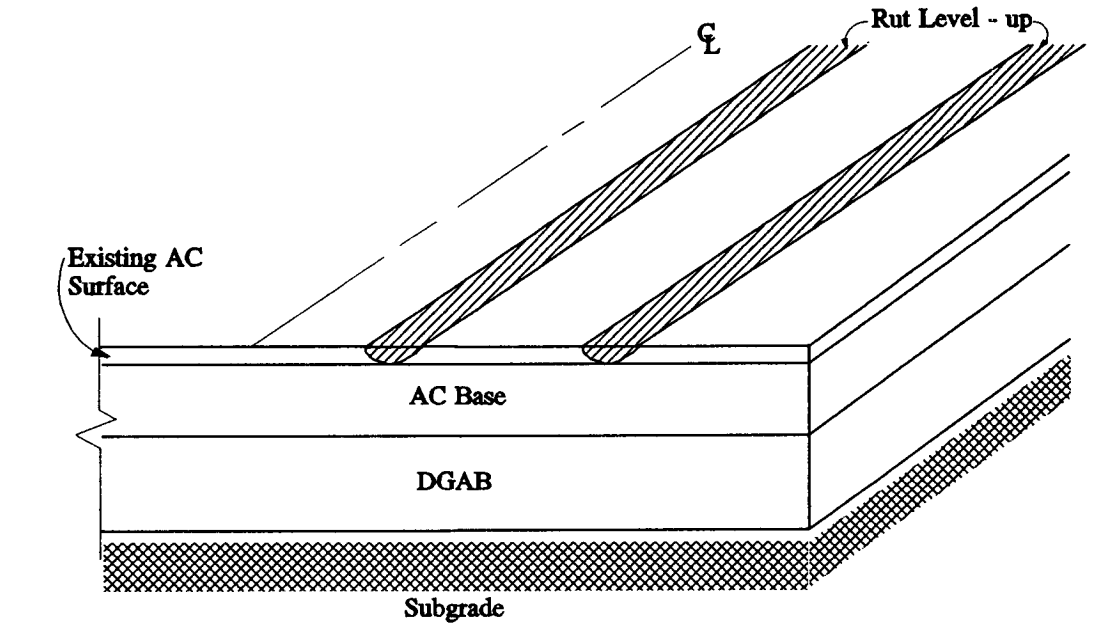

PREPARATION

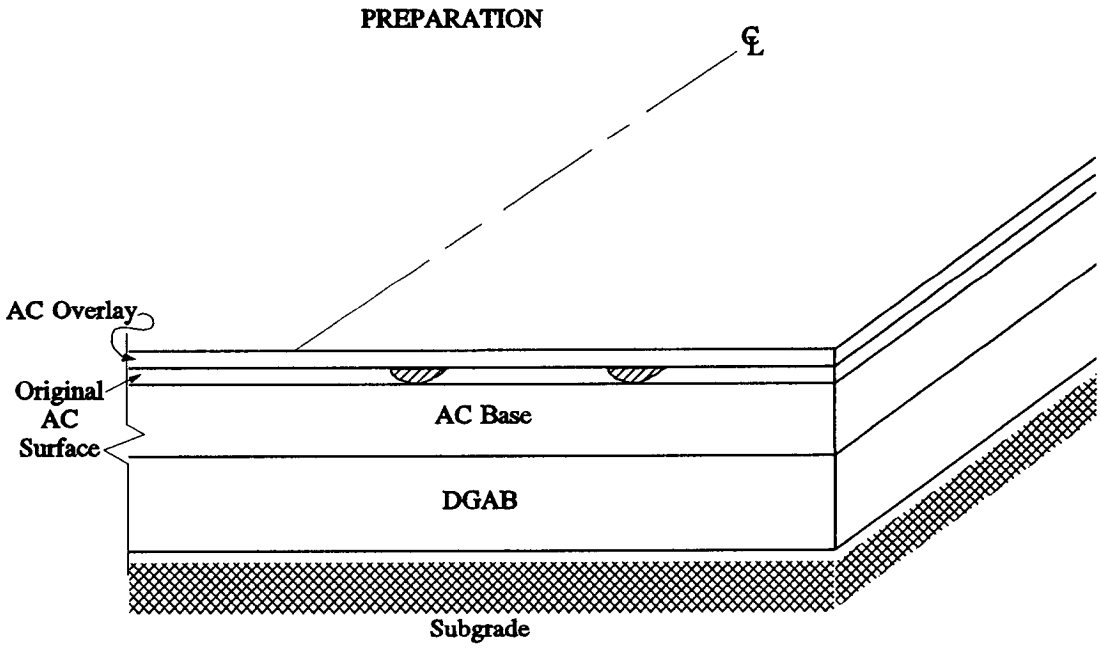

2 inch ASPHALT CONCRETE OVERLAY

Legend

AC = Asphalt concrete
DGAB = Dense - graded asphalt

Figure 14. Illustration of minimal preparation and 2-inch overlay.

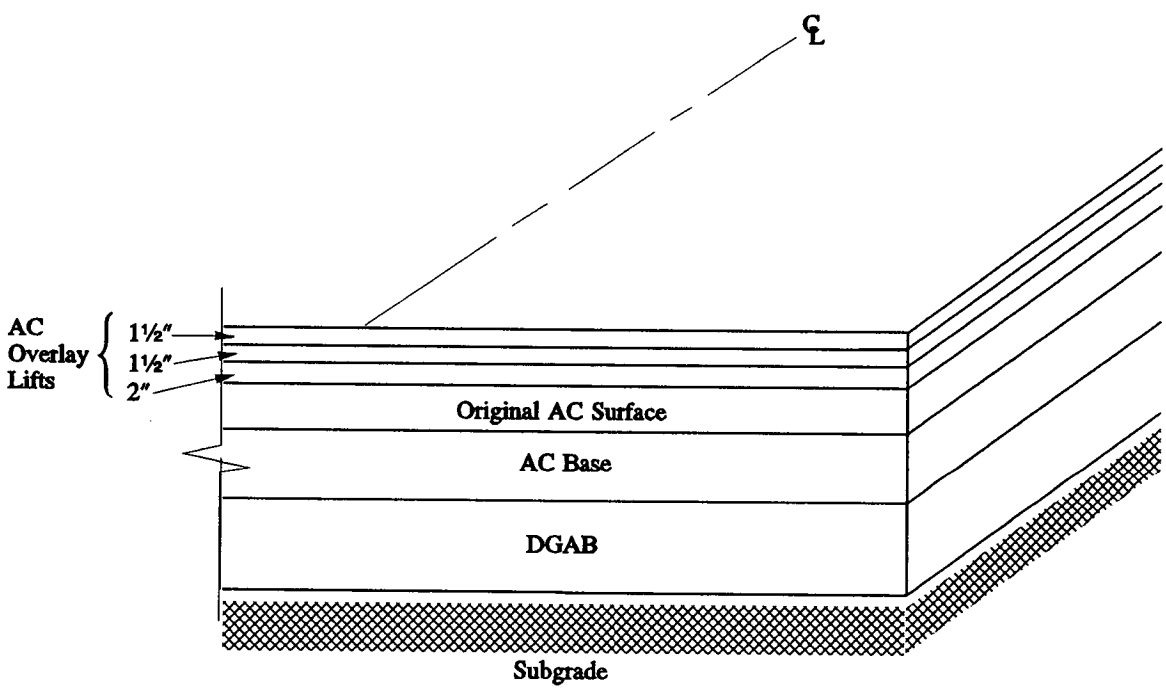

Legend

AC = Asphalt concrete
DGAB = Dense - graded aggregate base

Figure 15. Illustration of minimal preparation and 5-inch overlay.

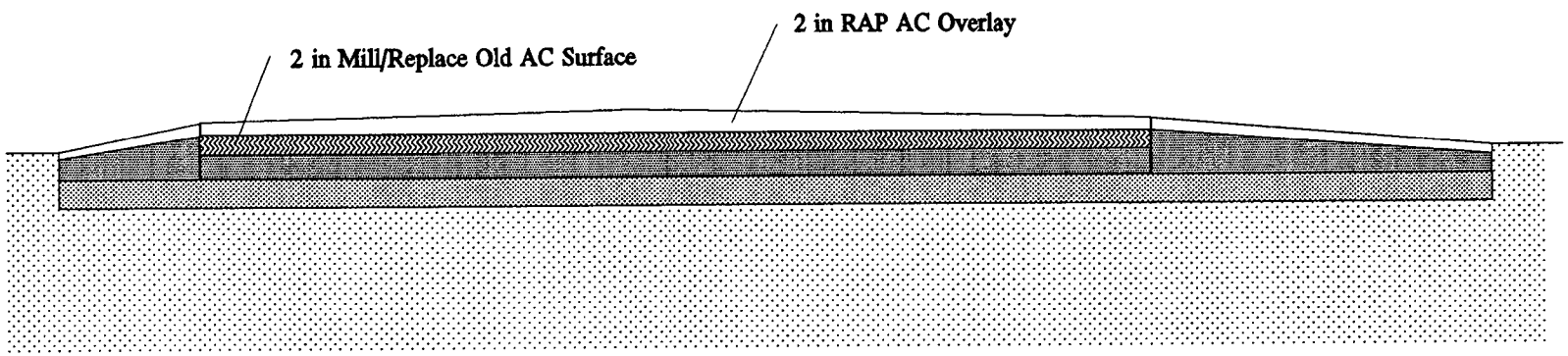

Legend

AC = Asphalt concrete
RAP = Recycled asphalt pavement

Figure 16. Illustration of intensive preparation by milling and overlay.

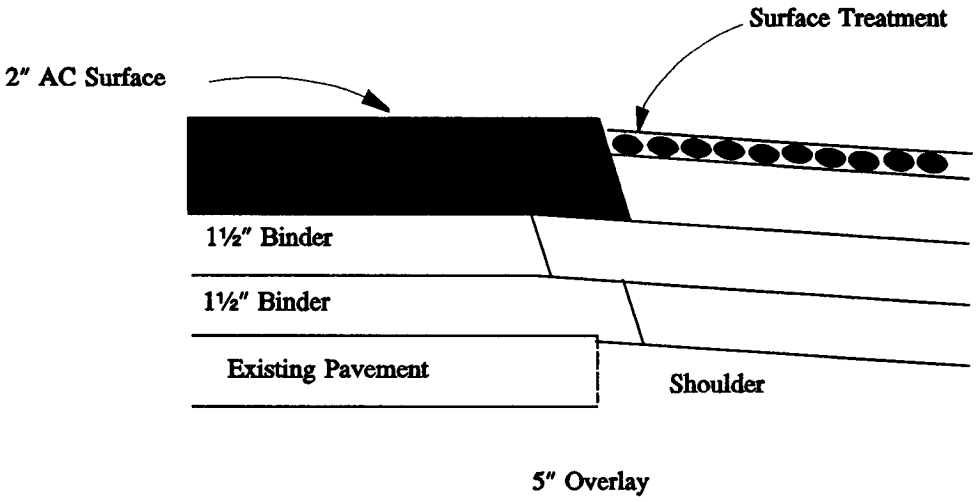

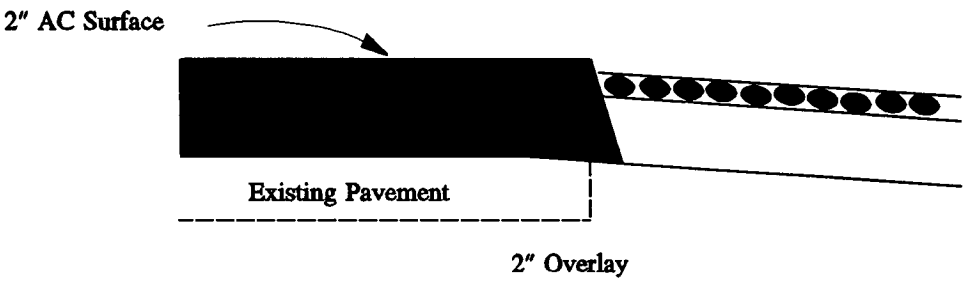

Legend

AC - Asphalt concrete

Figure 17. Shoulder joint detail.

Pavement Preparation and Restoration

The experiment evaluates the effects of two levels of pavement preparation or restoration, minimal and intensive, and the effects of crack/break and seat on the performance of the rehabilitated pavement. These preparation treatments and/or restoration levels are applied with or without an HMAC overlay. In one test section at each site, the experiment requires that the asphalt concrete overlay be sawed and sealed over the existing pavement joints and working cracks. In addition, a control test section that receives maintenance treatment but no substantial restoration or overlay is included for comparison. Restoration options considered for the test sections include joint and crack sealing, partial- and full-depth patching, load transfer restoration, diamond grinding, undersealing, and subdrainage.

Maintenance of Control Section

The guidelines stipulate that repairs and treatments on the control section be limited to those maintenance activities needed to keep the test section in safe and functional condition. These maintenance activities include crack and joint cleaning and sealing and isolated spot pavement repairs that should be performed in accordance with the participating agency's procedures and practices. The control section will no longer be considered a part of the experiment if maintenance, restoration, or rehabilitation treatments that affect the structural response or performance of the pavement are applied. Grinding, undersealing, resurfacing, slab jacking, load transfer restoration, and installation of retrofitted underdrains or edge drains are examples of treatments that would cause removal of the control section from the experiment.

The guidelines stipulate that patching in the control section be limited to that normally performed by the agency maintenance personnel. The repair should be made with cold mix or HMAC unless other materials and procedures are commonly used by the agency for this maintenance activity. Patching should be limited to the repair of spalling or scaling confined to the upper one-third of the slab. Agency practice should be followed for the patching operation. The final surface of the patch should be smooth and flush with the existing pavement, and traffic should not be allowed until the repair material has fully cured.

Restoration Details

The guidelines stipulate that different types of restoration be performed on the different test sections. Also, some test sections will not be resurfaced after restoration, while others will be resurfaced with different overlay thicknesses. Table 15 lists the restoration and overlay requirements for the different test sections at each test site.

Table 15. Restoration and overlay requirements.

Test Section Details and Treatment Options	Surface Preparation							
	Routine	Minimal			Intensive		Crack & Seat	
Section number	1	2	3	4	5	6	7	8
Section length (x 100 feet)	5	10	5	5	10	5	5	5
Overlay thickness (inches)	0	0	4	4	0	4	4	8
Joint sealing	X	X	N	N	R & R	N	N	N
Crack sealing	X	X	N	N	R & R	N	N	N
Partial depth patch	N	X	X	X	R & R	R & R	N	N
Full depth patch/joint repair	N	X	X	X	R & R	R & R	N	N
Load transfer restoration	N	N	N	N	B	B	N	N
Full surface diamond grinding	N	X	N	N	A	N	N	N
Undersealing	N	N	N	N	X	X	N	N
Subdrainage	N	N	N	N	A	A	A	A
Crack/break and seat	N	N	N	N	N	N	A	A
Saw and seal	N	N	N	A	N	N	N	N

X = Apply treatment as warranted.
R & R = Remove & replace existing and apply additional as warranted.
N = Do not perform.
B = Full-depth doweled patch or retrofit dowels in slots.
A = Apply treatment regardless of condition or need.

Joint and Crack Sealing

The guidelines stipulate that joint and crack cleaning and sealing should be performed only on those test sections that are restored without an overlay. For the test sections designated for minimal restoration, only those cracks and joints that have not been previously sealed or those exhibiting defective seals (sealant has become dislodged or has cracked so that it no longer provides an effective barrier against moisture or debris) should be cleaned and resealed. However, for the test sections designated for intensive restoration, all crack and joint sealants should be removed and replaced. Also, cracks and joints that have not previously been sealed should be cleaned and sealed. The same sealant type should be used for both crack and joint sealing.

The guidelines stipulate that cracks that are less than ⅛ inch wide and exhibit no spalling not be widened or sealed. However, cracks that are less than ⅛ inch wide and exhibit faulting and/or rough edges and cracks that are ⅛ to ¾ inch wide and exhibit no or minor spalling should be routed or sawed and then sealed. Cracks that are ⅛ to ¾ inch wide and exhibit moderate to severe spalling should be repaired by partial-depth patching and then sealed. Cracks that are more than ¾ inch wide and exhibit no spalling should be routed and sealed. However, cracks that are more than ¾ inch wide and exhibit moderate to severe spalling should be repaired by full-depth patch.

The guidelines stipulate the use of procedures and materials of proven acceptable record for joint and crack sealing and excludes the use of experiment sealants. Field-poured liquid sealants should conform to ASTM D3405, Joint Sealants, Hot-Poured, for Concrete and Asphalt Pavements. Silicone sealants should be used according to agency requirements. The joints should be cleaned using a rectangular joint plow or diamond blade saw. Preformed compression seals should be removed manually. Joint faces should be recut to provide the necessary shape factor and to remove the old sealant from the joint faces. A shape factor of between 0.67 and 1.0 has been recommended for field-poured sealants and a factor of up to 2.0 has been recommended for low-modulus silicone sealants. The refaced joint opening should not be larger than 1½ inch.

After joint sawing, the newly exposed joint faces should be cleaned by sandblasting. The field-poured liquid sealant should be applied such that the surface of the sealant material is ¼ ± ⅛ inch below the adjacent pavement surface. Traffic should not be permitted on the pavement in the area of the joints during the curing period. The longitudinal center-line joints should be cleaned to a depth of approximately ¾ inch and a width of approximately ¼ inch. Crack cleaning and sealing or sealant replacement should be performed using the same procedures and materials used for the joints, but rotary impact routers should not be used.

Partial-Depth Patching

The guidelines stipulate that partial-depth patching be performed on those test sections that are treated at the minimal level on an as-warranted basis. However, all existing partial-depth

patches in the test sections that are designated for intensive restoration should be removed and replaced. Partial-depth patching should be performed to repair areas with spalling or scaling confined to the upper half of the concrete slab that contain no cracks extending through the entire slab thickness. Coring may be performed to determine the extent of deterioration. Full-depth patching will be required if full-depth cracks exist.

To perform partial-depth patching, the guidelines stipulate that the concrete within the patch area be removed with vertical saw cuts approximately 1½ to 2 inches deep to expose the sound concrete. The unsound material should be removed carefully to prevent damage to the edges. The patch mixture should be portland cement concrete or other material approved by the agency, but no organic compounds such as asphalt concrete or epoxy resin mortars should be used. Cement grout may be used to enhance bonding of the patch to the old concrete.

Full-Depth Patching

The guidelines stipulate that full-depth patching be performed on the test sections designated for minimal restoration on an as-warranted basis. However, all existing full-depth patches in the test sections that are designated for intensive restoration should be removed and replaced. Full-depth patching should be performed to repair deteriorated joints and working cracks that are too wide to be sealed. The patch should be at least 6 feet long and should extend for the entire lane width. After removal of the deteriorated pavement section, the exposed subbase should be restored to a suitable condition and undercuts should be replaced to the existing grade level with similar materials. Only portland cement concrete patching material should be used, and the batch thickness should be the same as that of the adjacent concrete slab. The guidelines stipulate that deformed tie bars or smooth dowels be used along the transverse edge of the patch, as illustrated in Figure 18, and spaced according to the agency's requirements. However, at least four bars should be used per wheel patch. Eighteen-inch-long epoxy-coated dowel bars 1¼ inches in diameter spaced 12 inches center to center have been recommended.

Load Transfer Restoration

The guidelines stipulate that load transfer restoration be performed only on those test sections designated for intensive restoration to restore load transfer across joints without load transfer devices and working cracks. This restoration is required if load transfer across these discontinuities is less than 70% as determined from deflection measurements with a heavy load (approximately 9000 pounds) at a temperature below 70°F. The restoration should be performed by means of full-depth patching or by use of retrofitted dowel bars. In this case, the retrofitted epoxy-coated, smooth round bars should be installed in slots cut into the pavement, as illustrated in Figure 19. The dowel bars should be 18 inches long, 1¼ inch in diameter, and spaced according to the agency's requirements, but at least four bars in each wheel path should be used. Portland cement concrete or other suitable material should be used to backfill around the dowels.

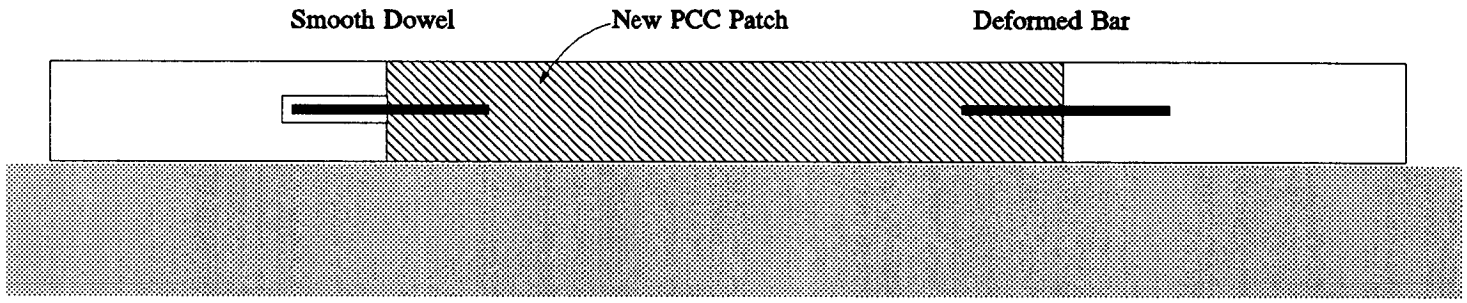

Legend

PCC = Portland cement concrete

Figure 18. Full-depth patch detail.

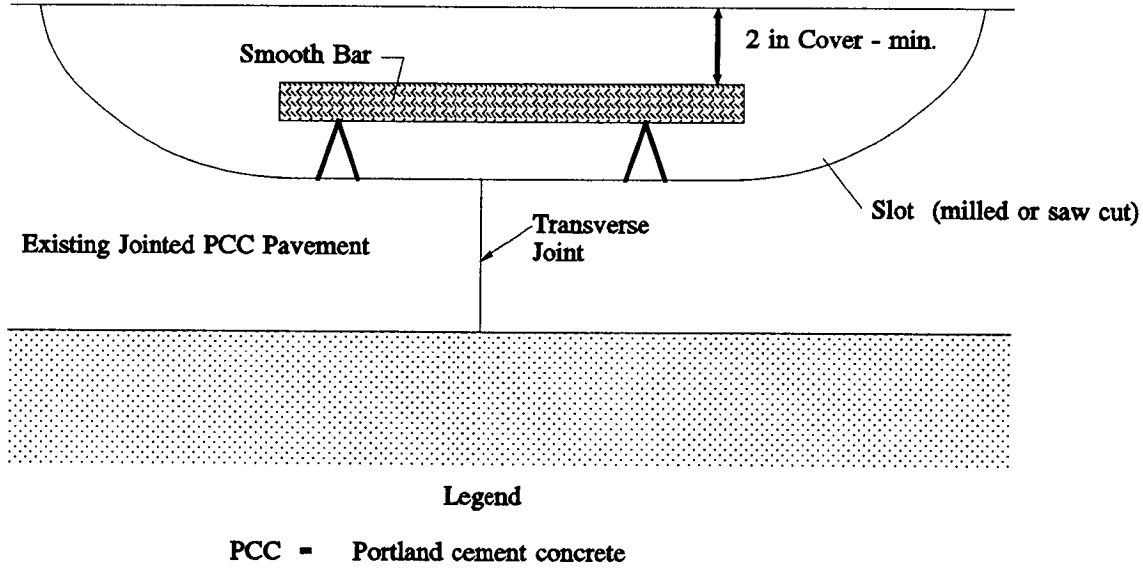

Figure 19. Joint load transfer restoration.

Full-Surface Diamond Grinding

The guidelines stipulate that full-surface diamond grinding be performed only on the test sections designated for intensive restoration without an overlay to correct transverse and longitudinal profile distortion due to the effects of faulting, warping, wear in the wheel path, or nonuniform volume change of the subgrade. Full-surface diamond grinding should be performed on the test sections intended for minimal restoration without an overlay only if warranted. Grinding is considered warranted if (1) at least 10% of the joints and working cracks in the section exhibit faulting over 25% or more of each joint or crack length of 0.25 inch or more for jointed plain concrete pavements or 0.40 inch or more for jointed reinforced concrete pavements; (2) at least 10% of the transverse cracks and joints in jointed reinforced concrete pavements that are spaced at 20 to 30 feet exhibit faulting of 0.25 inch or more; or (3) if the transverse cross slope is less than 1.5% or the prorated profile index over the test section is greater than 20 inches per mile.

Grinding should be performed continuously over the entire length of the test section, which must be structurally sound regardless of the extent of cracking. Grinding should be performed to obtain a pavement surface with a prorated profile index of less than 7 inches per mile as measured with a California-type profilograph and evaluated using California Test 526.

Undersealing

The guidelines stipulate that undersealing (also known as subsealing) of the concrete slab may be performed on those test sections intended for intensive restoration to fill small voids between the slab and the subbase and help restore full support to the slab. Undersealing should not be performed to adjust the vertical profile of the slab; it should be performed only when the existence of voids beneath the slab can be determined according to the agency's procedures.

The guidelines stipulate that undersealing be performed according to agency practices prior to surface diamond grinding or installation of subdrainage, using only pozzolanic cement or limestone cement grouts. The grout should contain Class C or Class F fly ash meeting the requirements of AASHTO Specification for Fly Ash and Raw or Calcined Natural Pozzolan for Use as a Mineral Admixture in Portland Cement Concrete (M618) or limestone with a spherical crystalline structure and gradation of 95% passing the No. 30 sieve and 30% passing the No. 200 sieve. Injection holes should be placed at least 3 feet away from any existing subsurface drainage structures and inspection holes should be located near thepavement edge to monitor the entry of grout into the drainage system. Grout pumping should be stopped if vertical movement of the slab or shoulder is detected, if grout flows out of the observation holes or drainage structure, or if a rapid increase in pumping pressure occurs. Grout that enters pavement joints should be removed and cracks developed as a result of the undersealing operation must be sealed by epoxy grout or repaired by full-depth patches. Traffic should not be allowed on the subsealed area until the grout has cured or for a minimum of 2 hours. The guidelines also recommend follow-up testing to assess

undersealing effectiveness using the agency's procedure or the procedure described in *AASHTO Guide Specifications for Highway Construction*[5].

Subdrainage

The guidelines stipulate that retrofitted subsurface drainage systems limited to longitudinal edge drains and outflow pipes be installed in the test sections intended for intensive preparation and crack/break and seat. Edge drains on the crack/break and seat sections must be installed prior to the crack/break and seat operations. Details of the subsurface edge drainage system, including drain geometry, filter materials, collector pipes, outlet systems, and other features, should be selected by the agency based on previous experience, AASHTO recommendations, or other information, but they should not include unproven treatments. Trenching should be performed with care to maintain correct line and grade.

Crack/Break and Seat

"Crack and seat" and "break and seat" refer to the operations performed on jointed plain and jointed reinforced concrete pavements, respectively, prior to placement of the bituminous concrete overlay. These operations include determination of crack/break configurations, load energy, and number of passes for seating in the test site; verification of crack propagation; cleaning of surface, cracks, and joints; removal of loose pieces and patching as required; application of a tack coat; and placement of overlay.

The guidelines stipulate the use of a guillotine or pile driver hammer for breaking the jointed concrete pavement and the use of pneumatic-tired rollers of at least 50 tons for seating the broken slabs. The guidelines require that the majority of the cracked pieces of the jointed plain concrete pavement slabs be not more than 36 inches in any edge dimension. However, the majority of the broken pieces of the jointed reinforced concrete pavement slabs should be about 18 inches and none of the pieces should exceed 24 inches in any dimension. Cracked or broken pieces should be rectangular or diamond-shaped. Crack/break and seat operations on the test sections should be performed only after the contractor has completed similar operations on a test strip and established equipment requirements to achieve the desired cracking pattern.

The guidelines stipulate that traffic not be permitted on the broken and seated portion of the pavement until after the first course of the bituminous concrete overlay has been placed. The overlay should be placed as soon as is practical, but not later than 48 hours, after the crack/break and seat operations. All bituminous concrete overlay base and/or binder course should be placed and completed within a 10-working-day period.

Asphalt Concrete Overlay

The experiment design stipulates the use of HMAC overlays for some of the test sections constructed at each test site. The asphalt concrete mixture must be composed of all virgin (all new) material. To promote uniformity between test sites, the guidelines stipulate that the design of the asphaltic concrete mixture should be performed in accordance with the guidelines contrived in FHWA Technical Advisory T5040.27, *Asphalt Concrete Mix Design and Field Control*[3] with the mix design criteria revision to conform to Asphalt Institute Manual MS-2, *Mix Design Methods for Asphalt Concrete and Other Hot-Mix Types.*[4] Target values for Marshall, Hveem, and void properties are specified. The guidelines stipulate the use of aggregates, asphalt cement, and additives having properties similar to those described for the asphalt concrete surface layer used in the experiment on structural factors for flexible pavements.

The guidelines stipulate that overlay placement be performed in a manner consistent with normal highway construction practice, with adequate attention given to the details and control of mix plant, hauling, placement, and compaction. Lift thickness should be limited to 4 inches. All transverse construction joints should be placed outside the test sections and longitudinal joints should be located within 1 foot of the center of a lane or the center of adjacent lanes. The as-compacted thickness of the asphalt concrete overlay should be constructed to within +¼ and +½ inch of the specified thickness for the 4- and 8-inch-thick overlays, respectively. The as-constructed finished surface of the overlay should have a prorated profile index of less than 10 inches per mile as measured by a California-type profilograph and evaluated using California Test 526.

Saw and Seal

Saw and seal operations consist of marking, sawing, cleaning, and sealing of joints in the HMAC overlay. The guidelines stipulate that the locations of joints and working cracks in the existing pavement be referenced prior to overlay placement so that the joints in the overlay can be sawed within 1 inch of these locations. Sawing of the joints in the overlay should be initiated 3 to 7 days after placement of the asphalt concrete surface course. For two-lift construction, the joints must be sawed in the first lift if the second lift will be placed more than 7 days after the first lift. The saw cuts must be thoroughly cleaned by water blasting and should be completely dry before sealing.

The guidelines stipulate that saw and seal be performed only above transverse joints and working cracks. The saw cut must extend beyond the edge of the existing concrete pavement into the asphalt concrete shoulder for at least 36 inches. The saw cut should be at least 1½ inch deep and ⅜ inch wide with a shape factor conforming to the agency's practice or the sealeant manufacturer's recommendation. The sawing and sealing operations should be performed continuously on the test section using a diamond saw to produce straight, uniform, vertical cuts. All saw cuts in the test section should be performed during the same day.

Other Considerations

In addition to detailed specifications pertaining to surface preparation and overlay materials and placement, the construction guidelines also address the aspects of shoulders, maintenance activities, lane additions and widening, and other factors that may affect the performance of the test sections.

For this experiment, the guidelines exclude certain factors that are not part of the study and that alter the characteristics or rate of deterioration of the pavement. Widening of test lanes, use of geotextiles, or addition of outside lanes are not acceptable on the test sections. The addition of outside shoulders is acceptable provided that they are not integral with the study lane and do not act as a widened lane.

The guidelines stipulate that a surface friction course may be used on the test sections if it is required by the participating agency. However, the thickness should be limited to ¾ inch and the surface friction course should not be considered as part of the overlay thickness specified for the section.

Typical Cross Sections

The experiment on rehabilitation of jointed portland cement concrete pavements requires the construction of seven different test sections at different locations. These test sections incorporate different combinations of surface preparation with or without an asphalt concrete overlay. The thickness of the overlay and the surface preparation level of the different test sections are described in Chapter 2, Experiment Design. In addition, a nonoverlaid control section that receives only routine maintenance is included in each test site for comparison.

Figure 20 illustrates a typical cross section of the pavement prior to rehabilitation and also the control section. Figures 21 and 22 illustrate typical cross sections for test sections rehabilitated with minimal surface preparation without an overlay and with an overlay, respectively.

Figures 23 and 24 illustrate test sections rehabilitated with intensive preparation without an overlay and with an overlay, respectively. Figure 25 illustrates a test section rehabilitated with minimal restoration and an asphalt concrete overlay with sawed and sealed joints.

The experiment requires that all test sections except those restored without an overlay be constructed as uniformly as is practical over a minimum length of 600 feet. Test sections restored without an overlay should be constructed as uniformly as is practical over a minimum of 1100 feet. This will allow 500 or 1000 feet for monitoring purposes and an additional 50 feet at each section end for postoverlay sampling and other destructive testing without affecting the monitoring portion of the test section.

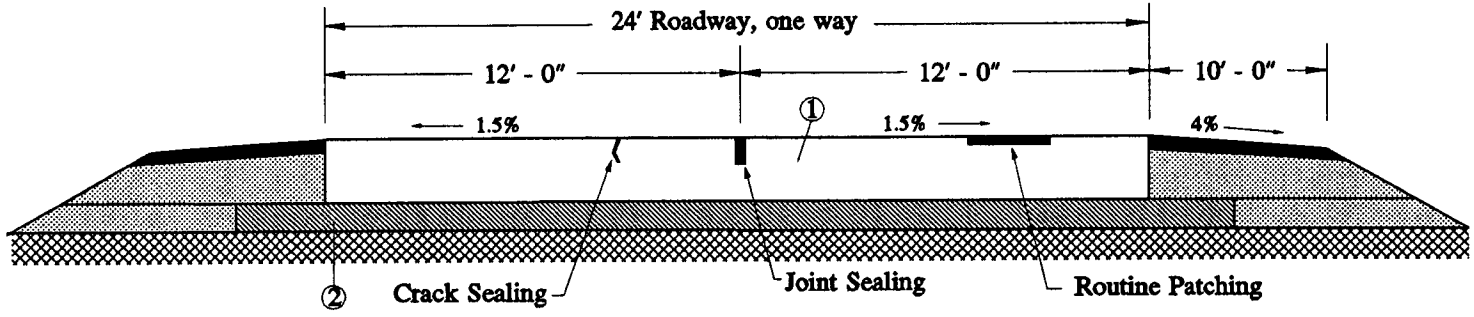

Legend

① 8" - 10" Jointed plain/jointed reinforced concrete pavement

② Treated/untreated subbase

Figure 20. A test section prior to rehabilitation.

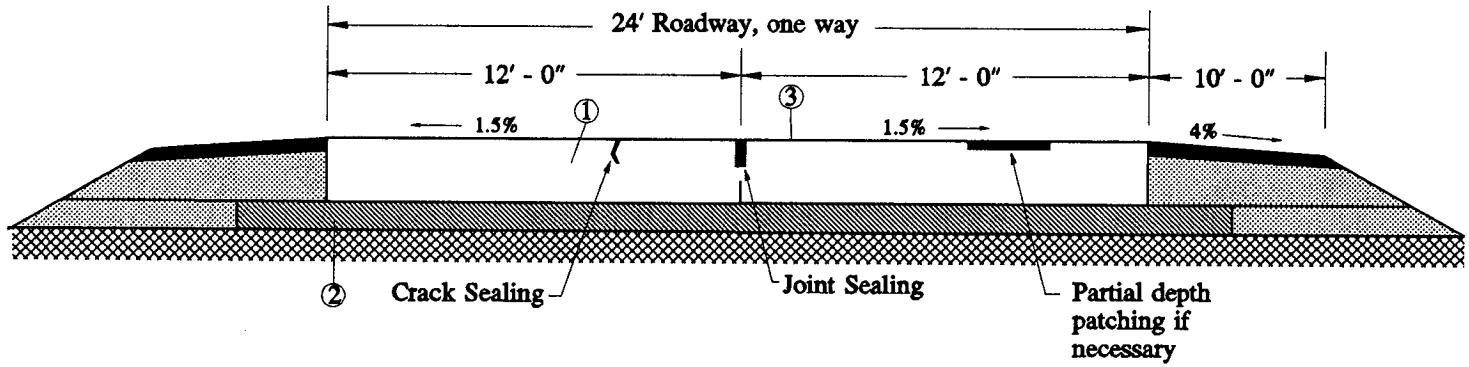

Legend

① 8″ - 10″ Jointed plain/jointed reinforced concrete pavement

② Treated subbase/untreated subbase

③ Full-surface grinding if necessary; also perform full-depth patching if necessary

Figure 21. A test section rehabilitated with minimal restoration and no overlay.

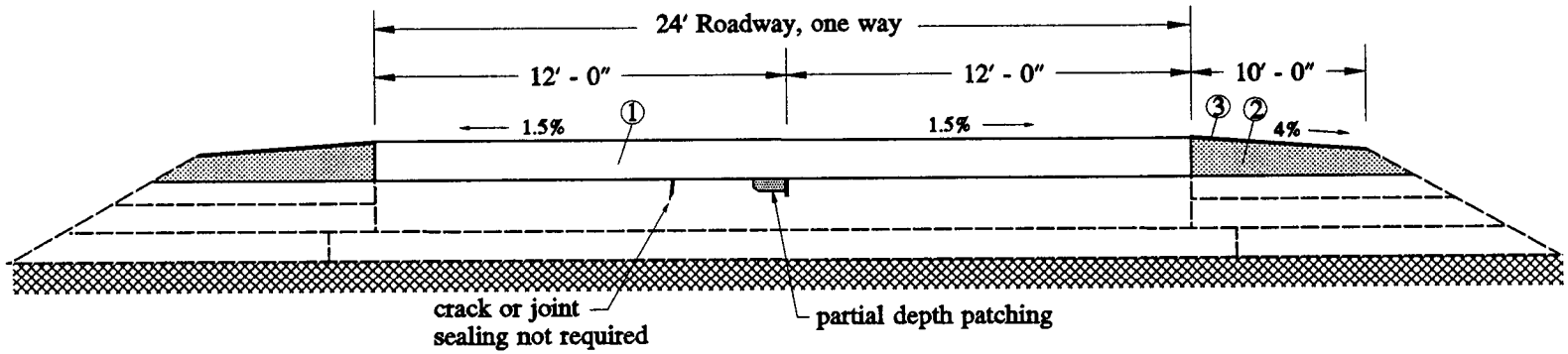

Legend

① Hot-mix asphalt concrete surface course (single lift or two lifts)

② Shoulder materials - agency practice

③ Surface treatment course

------ Existing pavement

Figure 22. A test section rehabilitated with minimal restoration and an overlay.

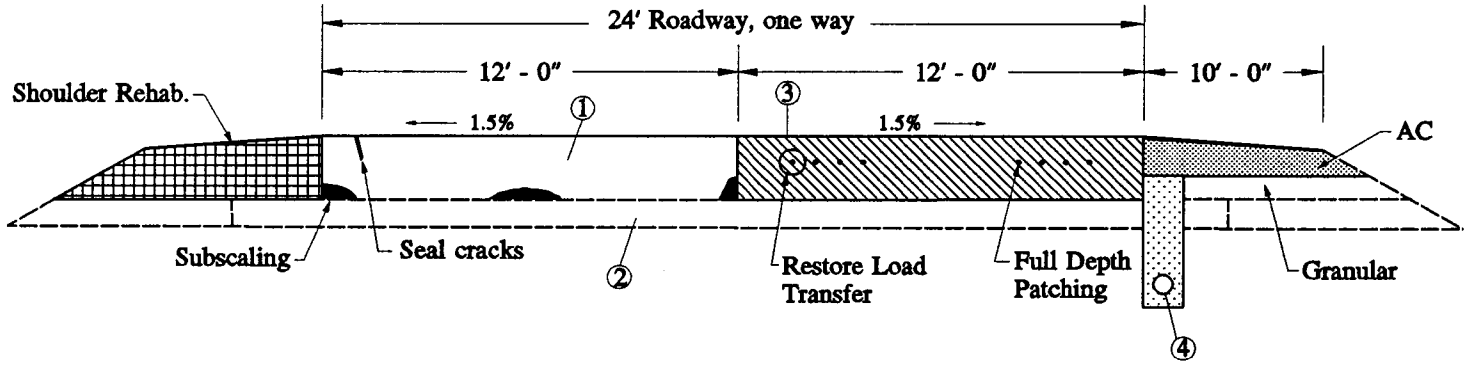

Legend

① 8" - 10" Jointed plain/jointed reinforced concrete pavement

② Treated/untreated subbase

③ Grinding of whole pavement

④ Subdrainage at edge

AC = Asphalt concrete

------ Existing pavement

Figure 23. A test section rehabilitated with intensive restoration and no overlay.

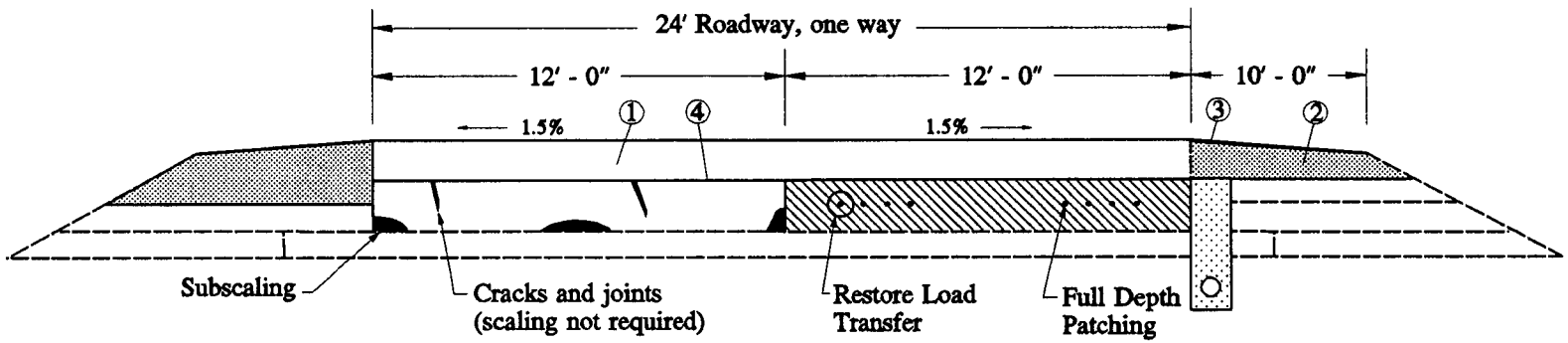

Legend

① Hot-mix asphalt concrete surface course (single lift or two lifts)

② Shoulder materials - agency practice

③ Surface treatment course

④ Surface grinding - grinding of whole pavement not required

------- Existing pavement

Figure 24. A test section rehabilitated with intensive restoration and an overlay.

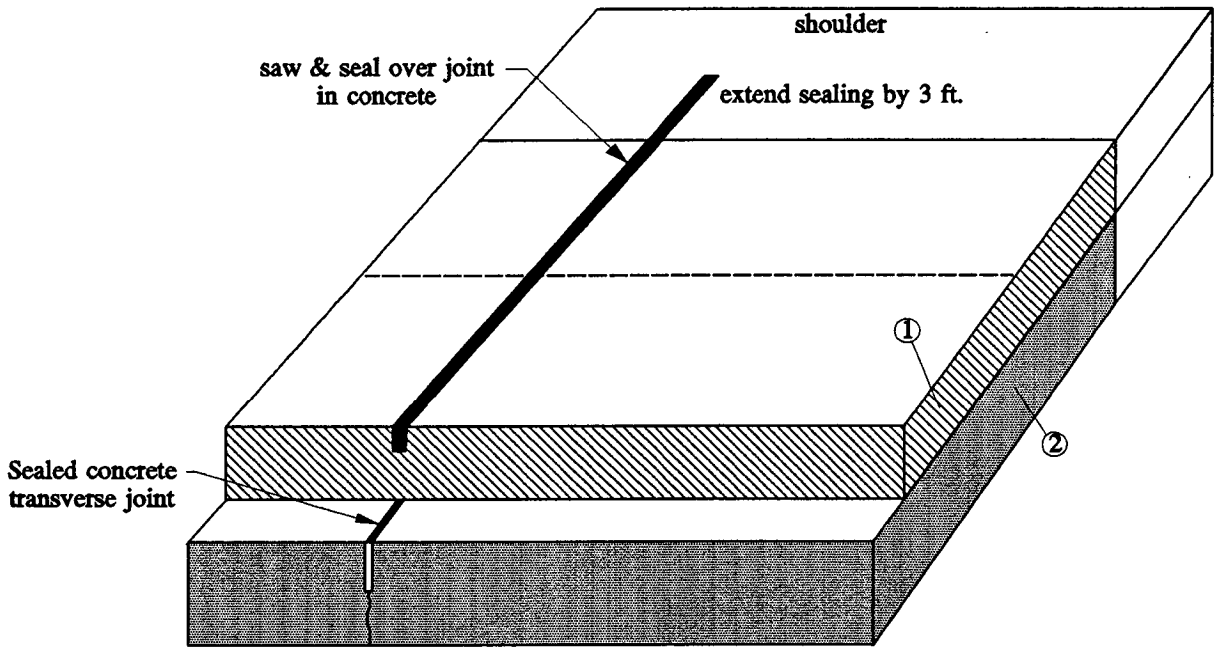

Legend

① Hot-mix asphalt concrete surface course (single lift or two lifts)

② Existing pavement

Figure 25. A test section rehabilitated with minimal restoration and an overlay with sawed and sealed joints.

Bonded Concrete Overlays of Concrete Pavements

The experiment on bonded concrete overlays of concrete pavements (SPS-7) addresses the effects of method of pavement preparation prior to resurfacing, use of cement grout, and overlay thickness on the performance of rehabilitated portland cement concrete pavements. The experiment addresses the effects of these rehabilitation parameters on jointed plain, jointed reinforced, and continuously reinforced concrete pavements. Guidelines pertaining to these study factors were provided to ensure uniformity and consistency among test sites. These guidelines stipulate that the test sections be in relatively good structural condition and exhibit no significant surface deterioration. Projects exhibiting D-cracking or aggregate reactivity problems or requiring full-depth patching over more than 5% of the surface to correct structural failures are not considered suitable candidates for this experiment.

Pavement Restoration Prior to Overlay

The experiment evaluates the effects of two types of pavement preparation, milling and shotblasting, with and without the use of a cement grout bonding layer, on the performance of the rehabilitated pavement. In addition, a control test section that receives only maintenance treatment and no overlay is included for comparison. When warranted, pre-overlay repair of the test sections is required to bring the existing pavement to a condition suitable for resurfacing. Repair options include partial- and full-depth patching, reflective crack control, joint sealing, load transfer restoration, undersealing, and installation of edge drains.

Maintenance of Control Section

The guidelines stipulate that repairs and treatments on the control section be limited to those maintenance activities needed to keep the test section in safe and functional condition. These maintenance activities should be performed in accordance with the participating agency's procedures and practices.

Pre-Overlay Repair of Existing Pavement

The guidelines stipulate that the existing pavement be appropriately restored prior to resurfacing. Restoration activities may include a combination of partial- and full-depth patching, reflective crack control, joint sealing, load transfer restoration, undersealing, and edge drain installation.

Partial- and Full-Depth Patching

Details for partial-depth patching for all pavement types and full-depth patching for jointed concrete pavements are the same as those described for the experiment on rehabilitation of jointed portland cement concrete pavements.

Full-depth patching for existing continuously reinforced concrete pavements is required to repair areas exhibiting punch-out distress. For these repairs, the guidelines stipulate the same requirements specified for jointed pavements except that the patch should be at least 10 feet long and extend the entire lane width. In addition, reinforcing steel in the patch area should be replaced to provide continuity of reinforcement, which could be accomplished by splicing or mechanical connections.

Reflective Crack Control

The guidelines stipulate that measures be taken to control reflection of working cracks into the overlay. This will be accomplished by placing No. 4 or No. 5 deformed steel bars across the cracks at right angles to the cracks. The guidelines stipulate the use of epoxy-coated bars, at least 24 inches long, spaced 30 inches center to center. The bars should be placed above the crack on chairs or directly over the pavement surface. A minimum of 2 inches of concrete cover must be provided, which can be achieved by placing the bars in recessed areas or slots along the length of the crack, as illustrated in Figure 26. The guidelines state that cracks with low load transfer efficiency and those exhibiting severe spalling, faulting, or pumping should be repaired by full-depth patching.

Alternatively, longitudinal cracks in jointed concrete pavements may be treated by using a cross-stitching technique, as illustrated in Figure 27. In this method, holes are drilled at a 35° angle to intersect through the crack at slab mid-depth. No. 6 bars are then inserted in the holes and grouted.

Joint Treatment

The guidelines stipulate that all existing pavement joints be protected to keep the bonding grout and the overlay concrete from penetrating into the unsealed joint reservoir. This may be accomplished by using an appropriately sized backer rod or other compressible material or joint surface.

Load Transfer Restoration

The guidelines and details for load transfer restoration across joints and working cracks are the same as those described for the experiment on rehabilitation of jointed portland cement concrete pavements.

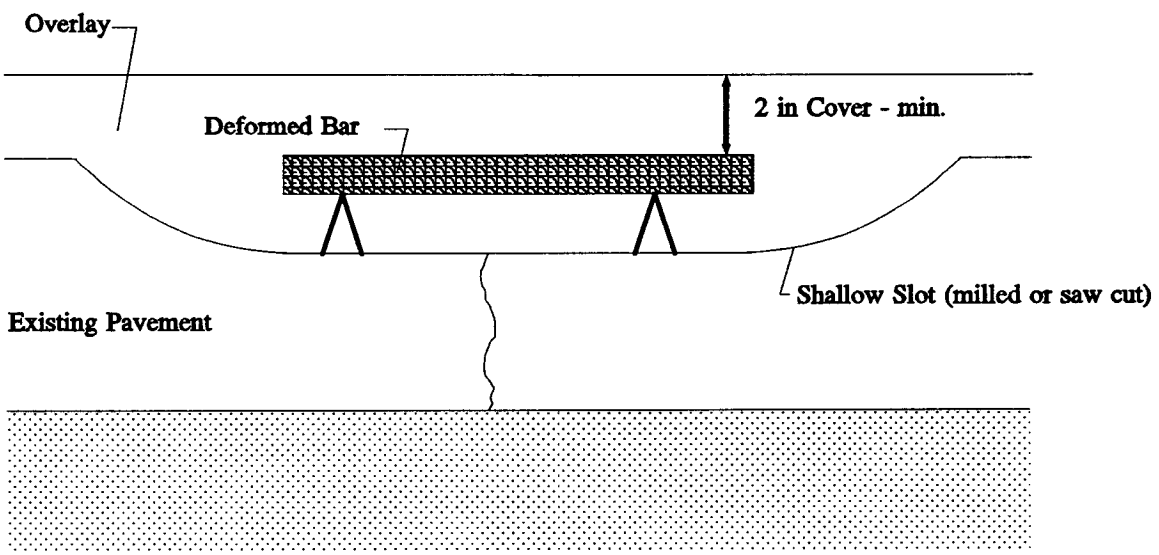

Figure 26. Detail of reflective crack control.

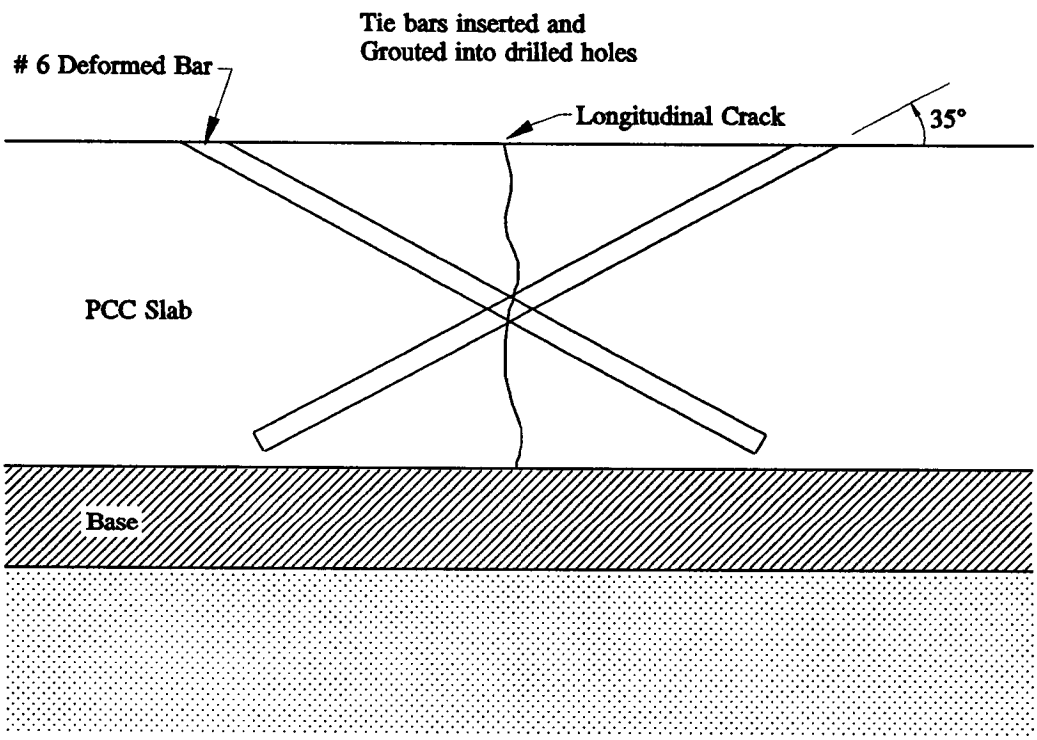

Note: Holes are alternated on each side of the crack, spaced 30 inches on center.
PCC = portland cement concrete.

Figure 27. Profile of cross-stitching repair.

Undersealing

The guidelines and details for undersealing to restore full support to the concrete slab are the same as those described for the experiment on rehabilitation of jointed portland cement concrete pavements.

Edge Drain Installation

Although the installation of edge drains is not required for this experiment, edge drains may be installed if their use represents the practice normally followed by the participating agency. The guidelines state that if edge drainage is installed, it should be installed for all test sections at the site, including the control section, in accordance with the participating agency's practices and procedures.

Preparation of Existing Pavement Surface

A clean and sound concrete surface is necessary to the development of an adequate bond between the overlay and the existing pavement. The guidelines stipulate that the surface of the old concrete pavement be prepared prior to resurfacing. This preparation involves removing foreign matter and contaminants from the surface and exposing sound concrete. For this experiment, surface removal is accomplished using cold milling equipment or shotblasting equipment. Secondary cleaning by sandblasting or other means is required when the shotblasting procedure is used for surface removal. A final cleaning to remove dust and other particulate matter is required just before the overlay placement operation.

Surface Removal by Cold Milling

The guidelines stipulate that milling of the pavement surface be performed with a power-operated mechanical scarifier capable of uniformly scarifying or removing the existing pavement surface to a depth of at least ¼ inch. Areas exhibiting surface distress such as joint spalling and scaling may be prepared during the milling operation by deeper milling to expose the sound concrete.

Surface Removal by Shotblasting

The guidelines stipulate that surface removal by shotblasting be performed with a mechanical unit that propels steel shot against the pavement surface and is capable of removing all surface contaminants and up to ⅛ inch of the existing concrete surface. The equipment must contain a means for collection of used shot so that it may be recycled. As multiple units or passes will be required to provide full-width coverage, care must be taken to ensure that no portion of the pavement is left untreated.

Secondary Surface Cleaning

Secondary cleaning is always required after cold milling but is not required after shotblasting if it can be demonstrated that the shotblasting equipment provides a suitable surface for overlay placement. The guidelines stipulate that secondary cleaning be performed by sandblasting, high-pressure water blasting with abrasives, or high-pressure water blasting.

Final Cleaning

A final cleaning is required to remove dust and other particulate matter just before the overlay placement operation. Air-blowing equipment or mechanical sweepers may be used for this purpose. The guidelines stipulate that the prepared surface of the old concrete be kept dry and that it not be wetted before the grout or overlay is placed.

Portland Cement Concrete

The quality of the as-delivered and as-placed concrete and the subsequent strength development are critical factors in the performance of the resurfaced pavement. The guidelines stipulate the use of cement, aggregates, water, and admixtures with properties similar to those required for the concrete specified for the experiment on structural factors for rigid pavements.

The guidelines stipulate that the concrete mixture be designed according to the procedures and specifications followed by the participating agency and recommend the use of the slip-form method for concrete placement. The general requirements for the portland cement concrete are as follows:

- Flexural strength: 500 to 700 psi average at 14 days.
- Slump (slip-form paving): 1 to 2½ inches.
- Air content: 6½ ± 1½ %.

Overlay Construction Operations

The concrete overlay operations may begin following completion of pavement preparation and final cleaning operations. These operations include placing of cement grout (where specified), placing concrete overlay, finishing and texturing surface, curing, jointing, and joint sealing.

The guidelines stipulate that a neat cement grout be applied to the prepared dry surface of the old pavement, where specified, immediately before placement of the overlay concrete. The grout should be applied at such a rate that only a thin coat covers the existing pavement surface. The grout may be applied through brooming or pressure spraying. If brooming is

used, it must be done just ahead of concrete placement. Grout is scrubbed onto the surface and distributed evenly over the full width of the pavement. In no case should the length of grout-treated pavement ahead of the spreader or slip-form paver exceed 10 feet. The grout application rate should be such that the grout does not become dry or powdery before it is covered with the overlay concrete. In areas where the grout becomes thoroughly dry before it is covered, the grout must be removed by sandblasting and fresh grout applied.

The guidelines stipulate that the concrete overlay be placed at full depth (3-inch or 5-inch nominal thickness) and full width. The use of slip-form equipment to spread, consolidate, screed, and float-finish the concrete to produce a well-consolidated and homogenous pavement has been recommended. The machine should vibrate the concrete for the full width and depth of the concrete. The temperature of the fresh concrete at time of placement should not exceed 90°F. Where steel reinforcement is used for reflective crack control, the reinforcement should be properly supported and held in place to ensure a minimum of 2 inches cover over the reinforcement. The reinforcement should be placed in a timely manner to avoid interference with the paving operations.

Finishing and texturing of the overlay surface should follow the procedures and specifications normally used by the participating highway agency.

The guidelines stipulate the use of white-pigmented curing compound, applied immediately after the overlay surface has been textured, at a rate of 1 gallon per 100 square feet. Curing compound should be applied to the overlay surface within 15 minutes after surface texturing and within 45 minutes after overlay placement.

The guidelines stipulate that for jointed concrete pavements, transverse joints be sawed in the overlay directly over the existing joints and over active joints formed by full-depth repairs. All transverse joints should be sawed for the full depth of the overlay, including any additional milling depth at the joints plus ½ inch. The width of the transverse joints should be equal to or greater than the width of the underlying joints. The sealant reservoir for transverse joints should conform to the agency's practice. The center-line joint should be sawed directly over the existing longitudinal joint to half the overlay thickness.

The guidelines highlight the importance of locating the joints in the overlay directly over the joints in the existing pavement. Therefore, it is required that the locations of joints in the existing pavement be clearly established prior to overlay placement so that the mismatch between joint locations does not exceed 1 inch. Also, sawing of the joints in the overlay should start as soon as the concrete is strong enough to support the sawing equipment and to prevent raveling of the overlay surface. Sawing of longitudinal and transverse joints should start at the same time, and all sawing should be completed within 24 hours of concrete placement. All pavement joints should be sealed before opening to traffic. Silicone sealant should be used. Experimental sealants and field-poured liquid sealants are excluded.

The guidelines highlight the importance of achieving an overlay thickness as close to the target values of 3 and 5 inches as possible. Cores and rod and level survey elevation measurements before and after overlay placement should be used to establish the as-placed overlay thickness, which should be within ¼ inch of the target value. Elevation

measurements should be taken at 50-foot intervals as described for pavement thickness determination for the experiment on structural factors for rigid pavements. Also, the surface of the finished overlay should be tested for smoothness in both wheel paths parallel to each edge of the pavement by a California-type profilograph. The prorated profile index should be less than 10 inches per mile over the test sections, evaluated using California Test 526. In addition, pavement areas with deviation greater than 0.4 inch in 25 feet should be removed by grinding or multiple-saw devices as approved by the agency.

Other Considerations

In addition to detailed specifications pertaining to surface preparation, overlay materials, and placement, construction guidelines address the aspects of shoulder rehabilitation and other factors that may affect performance of the test sections.

For this experiment, the guidelines exclude certain factors that are not part of the study and that would alter the characteristics or performance of the resurfaced pavement. Widening of test lanes and use of tied concrete shoulders are not permitted on the test sections. However, routine repair, maintenance, and leveling of shoulders should be performed according to the participating agency's practices.

The guidelines stipulate that the test sections not be opened to traffic until 14 days after concrete placement or until field-cured specimens have attained a flexural strength of 500 psi, whichever occurs first. Also, no construction traffic should be allowed on the test section until that time. In addition, joints must be sealed prior to opening to traffic.

Typical Cross Sections

The experiment on bonded concrete overlays of portland cement concrete pavements requires the construction of eight different test sections at different locations. These test sections incorporate different combinations of surface preparation, use of cement grout, and concrete overlay thickness. The thickness of the overlay and other details of the different test sections are described in Chapter 2, Experiment Design. In addition, a nonresurfaced control section that receives only routine maintenance is included in each test site for comparison.

Figure 28 illustrates a typical cross section of pavement prior to rehabilitation and also the control section. Figure 29 illustrates a typical cross section of a rehabilitated test section.

The experiment requires that all test sections be constructed as uniformly as is practical over a minimum length of 600 feet. This will allow 500 feet for monitoring purposes and an additional 50 feet at each end of the section for postoverlay sampling and other destructive testing without affecting the monitoring portion of the test section. In addition, the guidelines state that the test sections should be in relatively good structural condition and exhibit no significant surface deterioration. Projects exhibiting D-cracking or aggregate

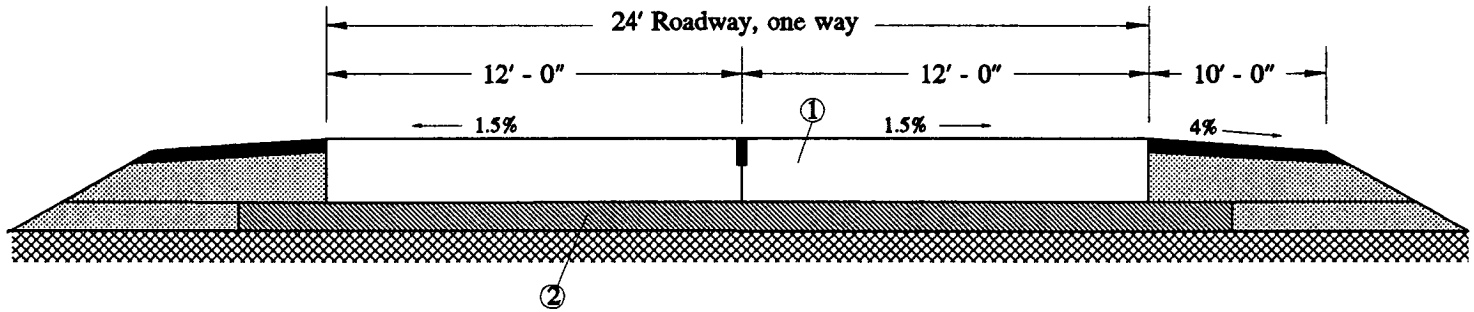

Legend

① Jointed plain/jointed reinforced/continuously reinforced concrete

② Treated/untreated subbase

Figure 28. Illustration of a concrete pavement prior to overlay.

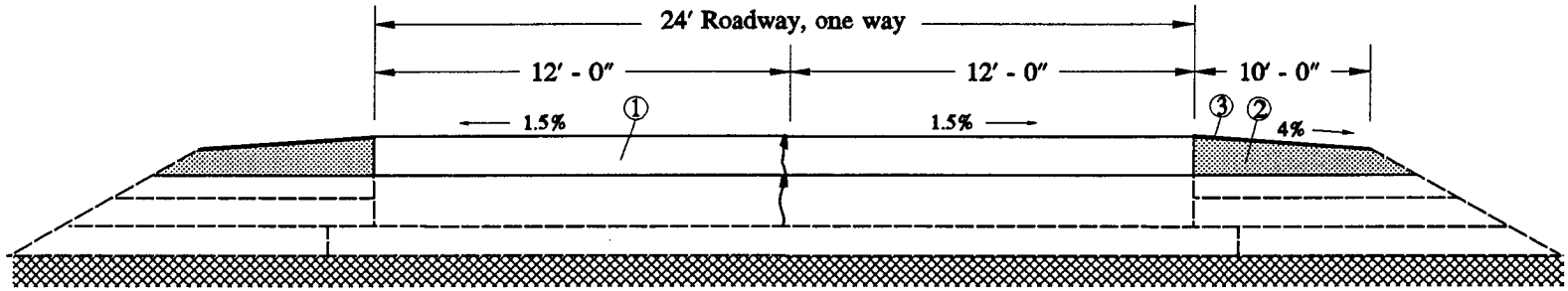

Legend

① Portland cement concrete overlay

② Shoulder materials - agency practice

③ Surface treatment course

------ Existing pavement

Figure 29. Illustration of a bonded concrete overlay on a concrete pavement.

reactivity problems or requiring full-depth patching over more than 5% of the surface to correct structural failures are not considered suitable candidates for this experiment.

Environmental Effects in the Absence of Heavy Loads

The experiment on environmental effects in the absence of heavy loads (SPS-8) addresses the performance of different designs of flexible and rigid pavements constructed on different types of subgrade when subjected to limited traffic loading. Guidelines pertaining to the pavement structures included in this experiment were provided to ensure uniformity and consistency among test sites.

Preparation and Compaction of Subgrade

The requirements for preparation and compaction of the subgrade for the flexible and rigid sections are the same as those specified for the test sections included in the experiments on structural factors for flexible and rigid pavements.

Base Layer

The construction guidelines stipulate the use of a dense-graded aggregate base for both flexible and rigid test sections included in this experiment. Requirements for the materials and construction of the base layers are the same as those specified for the dense-graded aggregate base required for the test sections included in the experiments on structural factors for flexible and rigid pavements.

Asphalt Concrete Mix Design and Construction

The materials and mix design for the HMAC surface of the flexible test sections are the same as those specified for the test sections included in the experiment on structural factors for flexible pavements. The guidelines stipulate that construction of the test sections be performed in a manner consistent with normal highway construction practice. Details of construction operations are the same as those required for the undrained test sections included in the experiment on structural factors for flexible pavements, which require a dense-graded aggregate base.

Portland Cement Concrete Mix Design, Materials, and Construction

The materials and mix design for the portland cement concrete surface of the rigid test sections are the same as those specified for the test sections included in the experiment on structural factors for rigid pavements, which require an average flexural strength of 550 psi

at 14 days. The details stipulated for the test sections are the same as those specified for the undrained doweled jointed plain concrete test sections included in the experiment on structural factors for rigid pavements. Therefore, the test pavements must have doweled perpendicular joints at 15 foot spacing and must be placed on a dense-graded untreated aggregate base. Construction operations pertaining to concrete placement, consolidation, texturing, curing, jointing, and joint sealing are the same as those specified for the other experiment.

Other Considerations

In addition to detailed specifications pertaining to the materials and construction of the different pavement layers, the construction guidelines also address the aspects of shoulders and other factors that may affect the performance of the test sections.

For this experiment, the guidelines stipulate that an asphalt concrete, untied portland cement concrete, or bituminous surface-treated aggregate shoulder must be constructed as part of the test section. The shoulder should extend at least 3 feet outside the edge of the travel lane and should be constructed according to participating highway agency practice.

For the flexible and rigid test sections, the requirements for transitions between test sections, opening to traffic, and use of surface friction course are the same as those specified for the experiments on structural factors for flexible and rigid pavements, respectively.

Typical Cross Sections

The experiment on environmental effects in the absence of heavy loads requires the construction of two flexible test sections and two rigid test sections on different subgrade types at different locations. These pavement structures incorporate different combinations of asphalt concrete or portland cement concrete surface thickness and base layer thickness. The type and thickness of layers included in the different test sections are described in Chapter 2, Experiment Design.

Figures 30 and 31 illustrate typical cross sections for the flexible and rigid test sections, respectively. As for the other experiments, each test section should be constructed as uniformly as is practical over a length of 600 feet to allow 500 feet for monitoring purposes and an additional 50 feet at each end for destructive testing.

Validation of SHRP Asphalt Specifications and Mix Design

The experiment on validation of SHRP asphalt specifications and mix design and innovations in asphalt pavements (SPS-9) compares the performance of asphalt concrete surfaced test sections. At least two test sections are required at each site, one section constructed with a mix designed according to the participating agency's practice and one section using a mix

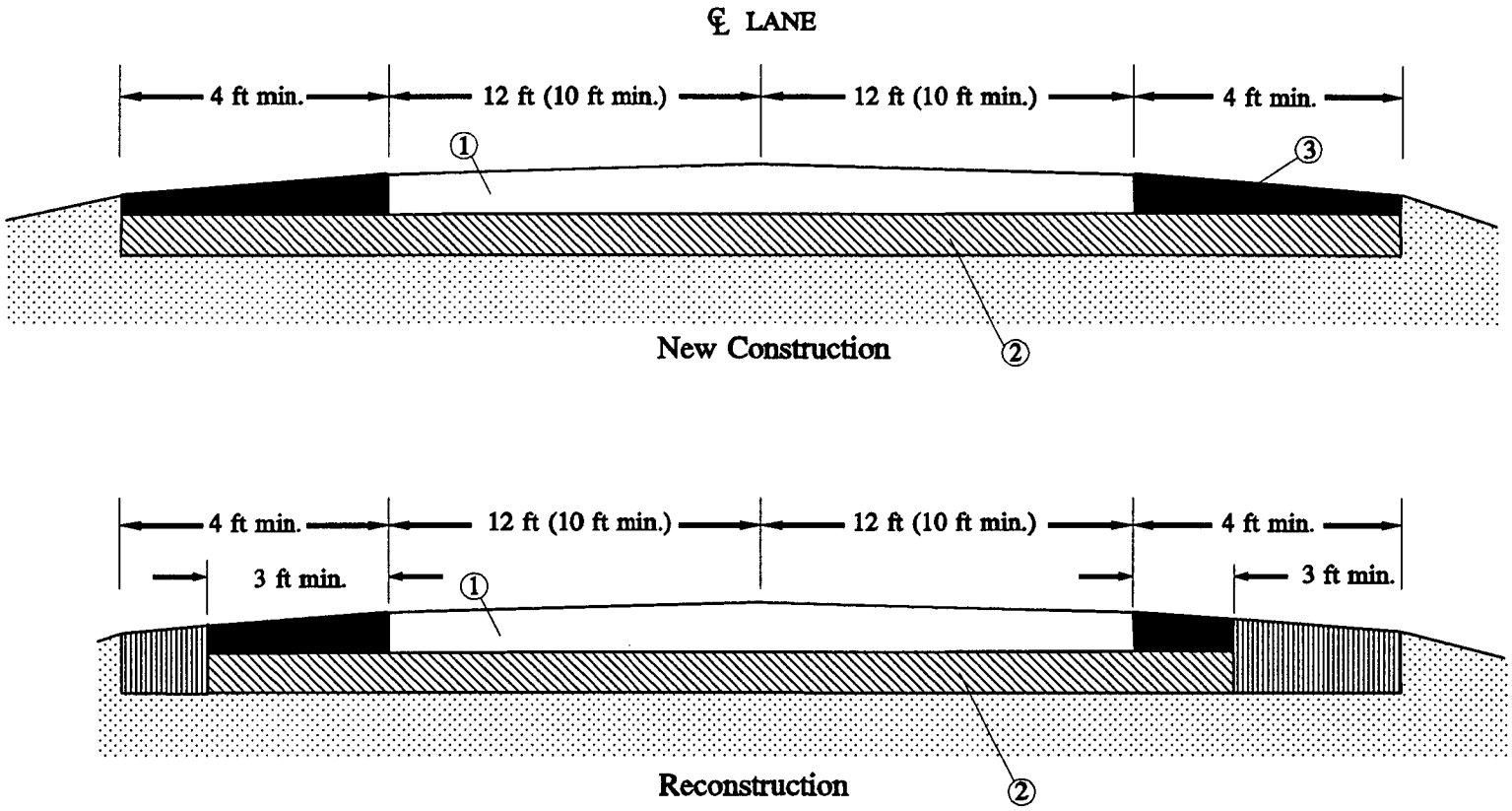

Legend

① Hot - mix asphalt concrete surface/binder course (4 and 7 inches)

② Dense - graded aggregate base (8 and 12 inches)

③ Shoulder

Figure 30. Cross sections of the flexible pavement test sections.

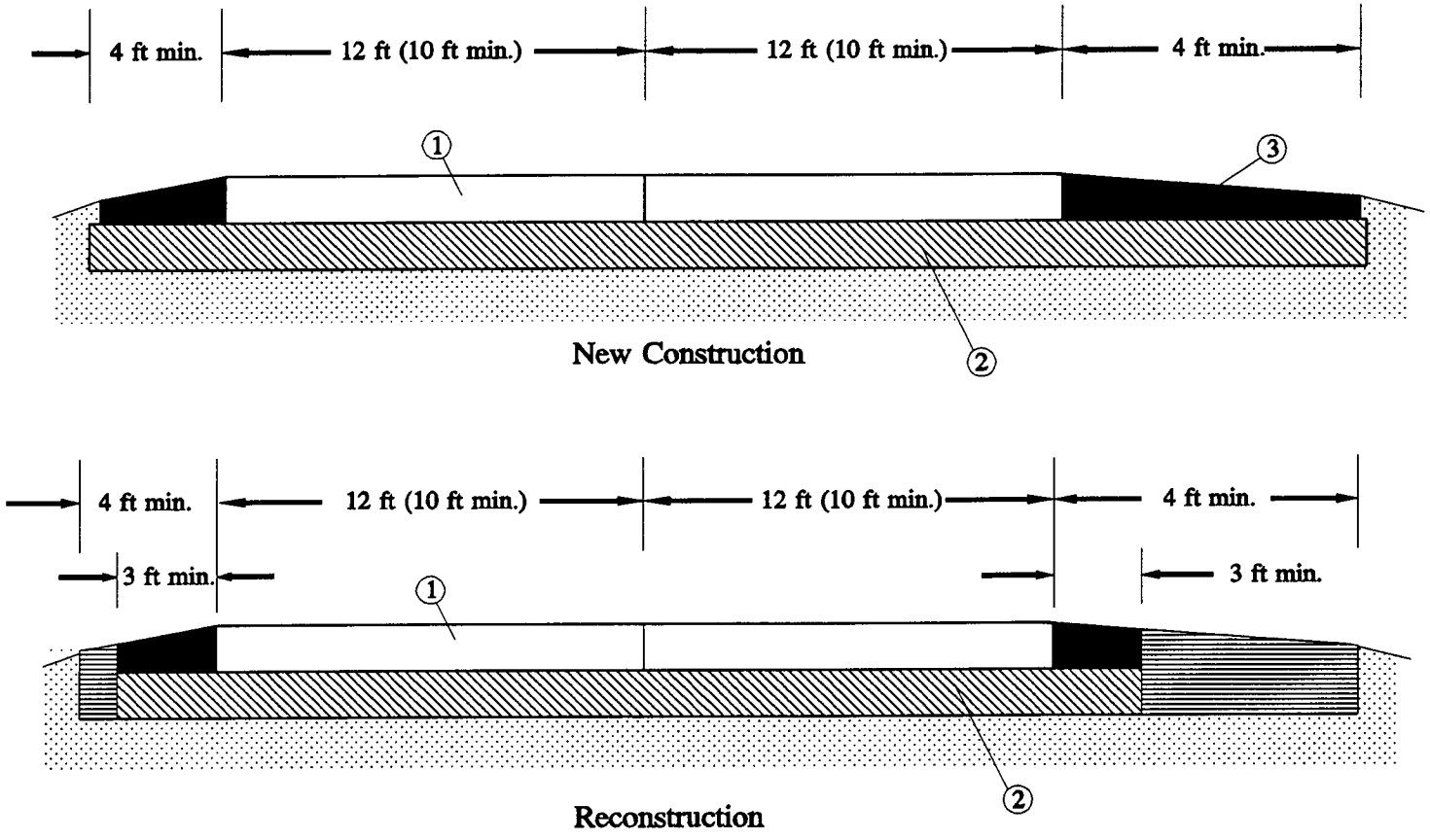

Legend

1. Portland cement concrete surface (8 and 11 inches)
2. Dense - graded aggregate base (6 inches)
3. Shoulder

Figure 31. Cross sections of the rigid pavement test sections.

designed to meet the SHRP performance-based specification. A third section constructed with a stone matrix asphalt (SMA) surface course may be included if desired by the agency. The requirements for this experiment are such that test sections may be constructed as part of new construction, reconstruction, or resurfacing of existing flexible or rigid pavements. Guidelines have been developed to promote uniformity in pavement structure of test sections at each site and to ensure that differences in performance are due to differences in the asphalt concrete mix. The guidelines provide requirements for subgrade and base course preparation for test sections built as part of new construction or reconstruction projects, for pre-overlay repair treatments for test sections built as part of rehabilitation of existing flexible or rigid pavements, for asphalt concrete materials and mix design procedures, and for general construction operations and as-built requirements.

Construction Operations

The experiment stipulates that construction operations be performed according to the guidelines and specifications presented in each participating agency's standard specifications for road and bridge construction. Care should be taken to ensure that construction of the test sections is performed in a manner consistent with normal highway practice.

The following construction-related guidelines are stipulated for the test sections:

- The asphalt concrete mix shall be placed only after the contractor has satisfactorily demonstrated proper placement and compaction procedures on locations other than those designated for the test sections.

- Longitudinal paving joints shall be located within 1 foot of the center of a lane or within 1 foot of the centers of two adjacent lanes.

- No transverse construction joints shall be placed within the test sections.

- The thickness of the as-compacted asphalt concrete layer (surface plus binder course) in any test section shall be within + ¼ inch of the average thickness for all test sections at the site.

- The finished surface of the overlay should be smooth and provide an excellent ride level.

- For projects that incorporate a separate binder and surface course HMAC mix, the surface course thickness shall be the same for all test sections. If an SMA-surfaced test section is included in the project, SMA thickness shall be at least 1½ inches and the total thickness of new asphalt concrete layers shall be equal to that used for the other test sections on the project.

The required test sections are 1000 feet in overall length, which includes a 500-foot-long monitoring section, 50-foot-long sampling areas before and after each section, and 200 feet on either end for long-term sampling of the asphalt surface layers. The distance between these sections must be sufficient to allow changes in materials during construction. A minimum transition length of 100 feet is recommended between test sections to provide sufficient production to develop consistency after changes in thicknesses. The required SMA test section is 700 feet in length to provide a 500-foot-long monitoring portion, a 50-foot sampling area on either end of the monitoring portion, and an additional 50 feet of transition on either end to provide for material changes between sections.

New Construction and Reconstruction

The guidelines stipulate that test sites constructed as part of new construction or reconstruction of flexible pavements conform to the following requirements:

1. The structural number must be between 80 and 120% of that determined using the 1986 AASHTO Guide.[2] Test sections may incorporate combinations of untreated and treated layers, including stabilized subgrade, treated subbase, and base courses. The total thickness of high-quality asphalt concrete (including hot-laid plant-mix asphalt-treated base) must be at least 4 inches.

2. Lane width must be 12 feet.

3. Edge drainage may be provided at the discretion of the agency. However, if edge drainage is provided, it must be included in all test sections at the site. Drainage structures under the pavement, if used, should consist of drainage blanket layers, whose thickness and structural properties are consistent throughout all test sections at a site.

4. Shoulders for new and reconstructed sections should extend a minimum of 4 feet outside the lane edge. The pavement structural cross section should extend a minimum of 4 feet outside the lane edge. A bituminous surface-treated aggregate shoulder is acceptable. Turf and untreated aggregate shoulders should not be used for the test sections.

The guidelines state that preparation of the subgrade and subbase should follow agency practice but should ensure uniformity in material type and layer thickness at each site. Elevations of the subgrade and subbase layers should not deviate more than 0.08 feet from the design when measured longitudinally at intervals of 50 feet.

Agency practice will govern the construction of the base course and should ensure uniformity of material type and layer thickness at each site. Elevations of the base layer should not deviate by more than 0.04 feet from the design when measured longitudinally at intervals of 50 feet. Correction of the grade deviation resulting from subgrade/subbase elevation variation may result in an allowable base course thickness variation of up to 0.12 feet.

Also, agency practice will govern the construction of the surface course and should ensure uniformity of material type and layer thickness at each site. Elevations of the surface layer should not deviate by more than 0.04 feet from the design when measured longitudinally at intervals of 50 feet. Thickness of the surface course layer should not vary by more than ½ inch. If SMA is used, its thickness shall not be less than 1½ inches, but the total thickness of HMAC (including SMA) shall be the same as at the other test sections at the site. A porous friction course may be used if it is the agency's normal practice.

The following requirements should be observed in subgrade preparation:

- The compaction of the subgrade shall be the width of the travel lanes plus the width of the inside and outside shoulders except in cases where sections are built as part of reconstruction of an existing pavement. Reconstruction must extend at least 3 feet outside the edge of the travel lanes to allow proper preparation of the subgrade and base course.

- Where sections are constructed on newly placed fill material, the thickness of the fill should be as uniform as possible along the test section.

- Proof rolling should be performed to verify the uniformity of support and to identify unstable areas that might require remedial construction (undercutting and replacement).

- Surface irregularities shall not exceed ½ inch between two points measured longitudinally or transversely using a 10-foot straightedge.

- Finished subgrade elevations shall not vary from the design by more than 0.083 feet based on rod and level survey readings conducted at a minimum of five locations (edge, outer wheel path, midlane, inner wheel path, and inside edge of lane) at longitudinal intervals no greater than 50 feet.

- Modifiers may be used to provide a stable working platform for construction but not to increase the strength of the subgrade.

The following requirements should be observed in base course construction:

- Reconstruction must extend at least 3 feet outside the edge of the travel lanes to allow proper preparation of the subgrade and base course.

- In-place density should be measured and recorded.

- Surface irregularities shall not exceed ¼ inch between two points measured longitudinally or transversely using a 10-foot straightedge.

- Finished base course elevations shall not vary from the design by more than 0.04 feet based on rod and level survey readings conducted at a minimum of five locations (edge, outer wheel path, midlane, inner wheel path, and inside edge of lane) at longitudinal intervals no greater than 50 feet.

The guidelines state that shoulders in new construction shall have the full pavement structure across their width or a minimum of a single bituminous surface treatment and shall be a minimum of 4 feet wide. For reconstruction sections, the new pavement structure shall extend at least 3 feet outside the edge of the travel lanes, with shoulders partially reconstructed to grade. If possible, all shoulders shall be paved full width with the surface course to eliminate longitudinal edge joints. If full-width paving cannot be achieved, the paving shall be performed so that the edge joint occurs a minimum of 1 foot outside the edge of the travel lane. Curbs and gutters, if used, must be placed a minimum of 6 feet from the edge of the travel lane. The participating agency's practice shall be used to provide asphalt concrete or bituminous surface-treated aggregate shoulders. Turf and untreated aggregate are not acceptable shoulder constructions for the test sections.

Rehabilitation of Existing Pavements

The guidelines stipulate that test sites constructed as part of the rehabilitation of existing flexible pavements conform to agency practices, including the following:

1. The asphalt surface layer may be constructed on either unbound or treated granular material.

2. The minimum lane width is 12 feet. Shoulders should extend a minimum of 4 feet outside the edge of the lane. Shoulders should be constructed of the mainline pavement structure but may be constructed of a bituminous surface-treated aggregate.

Prior to rehabilitation, the test sections at each site should exhibit uniform distress distribution. Milling may be used to remove portions of the existing pavement at the agency's discretion. If milling is used it shall be used on all test sections at the site. Milling or rut leveling must be performed on all sections as conditions warrant, in accordance with agency practice. Asphalt concrete should be used to patch defects prior to overlay construction. Full-depth patches, those requiring the removal of base and subbase materials, should be avoided in the 500-foot monitoring portion due to the differences (in structure, material condition, and type) between the patch and the existing pavement. Crack repair should be performed in accordance with agency practice.

Also, the guidelines state that the overlay should be placed in lifts not more than 4 inches thick. For test sections using SMA, the SMA thickness should not be less than 1½ inches. A porous friction course may be used if this is the agency's normal practice.

Projects constructed as part of the rehabilitation of existing rigid pavements shall conform to agency practices and the following general requirements:

1. Test sections may be constructed as part of the rehabilitation of jointed portland cement concrete (PCC) pavement (plain or reinforced) or continuously reinforced concrete pavement over an unbound or treated base (lean concrete, econocrete, etc.). Also, concrete pavements that were previously resurfaced with an asphalt concrete (AC) overlay may be considered.

2. The minimum lane width is 12 feet. Shoulders may be PCC, asphalt, or bituminous surface-treated aggregate.

3. Test sections may be constructed on rubblized PCC pavement. Crack/seat and break/seat techniques, in which the elimination of slab action can be highly variable, are not suited for this experiment.

The guidelines state that test sections must exhibit similar and uniform distress distribution throughout the site. Major surface defects (scaling, D-cracking) should be avoided for overlay projects but are not a prime consideration if rubblizing is specified. The average load transfer efficiency throughout the test sections for jointed PCC pavements should be greater than 70% prior to overlay construction. Load transfer restoration methods (such as full-depth repair, undersealing, or retrofitting dowels) must be used to restore the load transfer efficiency, if required. Partial-depth patching may be performed with either an AC or PCC mixture, but full-depth patches should be performed only with a PCC mixture.

The guidelines state that the overlay should be placed in lifts not more than 4 inches thick. For test sections using SMA, the SMA thickness should not be less than 1½ inches. If desired, sawing and sealing of joints in the asphalt overlay over the joints in the jointed concrete pavement should be provided in all test sections at the site. A porous friction course may be used if it is normal agency practice.

Asphalt Concrete Mix Design

The guidelines recommend that design of the conventional asphalt concrete mixes be performed in compliance with the state's practices and the guidelines contained in FHWA Technical Advisory T5040.27, *Asphalt Concrete Mix Design and Field Control*,[3] with the mix design criteria conforming to Asphalt Institute Manual MS-2, *Mix Design Methods for Asphalt Concrete and Other Hot-Mix Types*.[4] SHRP mixes shall be designed using the procedures and specifications contained in the SUPERPAVE report. SMA mixes shall be designed in accordance with the guidelines contained in the FHWA draft work plan, *Test and Evaluation Project No. 18, Stone Mastic Asphalt (SMA)*.[6]

The asphalt concrete used for the test sections should employ all new materials that have not been used in previous construction. Recycled asphalt pavement materials should not be used for test sections. Aggregates used in the mix shall be new aggregates of the highest quality

available to the agency. The asphalt grade and characteristics should be selected by the agency based on normal practice. Additives that are routinely used by an agency may be used in the mix design.

6

Data Collection

To help evaluate the performance of the different pavement structures constructed as part of the Specific Pavement Studies (SPS), data are to be collected from each test section and/or test site. Data to be collected are classified into 10 categories:

- Inventory and construction.
- Materials and laboratory test.
- Traffic.
- Distress.
- Profile.
- Deflection.
- Friction.
- Climatic.
- Maintenance.
- Rehabilitation.

To ensure uniform and consistent data collection, detailed procedures for data collection and reporting are described in guides and manuals. Detailed descriptions of these data collection activities are given in other reports dealing with monitoring and pavement materials characterization. Procedures and formats for storing these data are detailed in another report on information management systems. The data collection activity required for the SPS test sites is summarized in this chapter.

Inventory and Construction Data

Inventory data include the items necessary to identify test sections, describe their geometric details, characterize the material properties of each test section and its layers, and estimate maintenance costs. Most of this information is obtained from the participating agency's records.

Construction data pertain to the pavement layers constructed following the requirements stipulated for the experiment. For rehabilitation experiments, construction data address the overlay thickness and properties. For the experiments on structural factors and environmental effects, construction data address the thickness and properties of the different

pavement layers. An operational memorandum has been prepared for each SPS experiment to provide detailed information on the construction data that must be collected.

Materials and Laboratory Test Data

Materials and laboratory test data are obtained from an extensive field sampling and laboratory testing program designed to characterize pavement material properties that are expected to influence performance. Each SPS experiment has a unique sampling and testing plan. In situ measurements, field sampling, and laboratory test procedures for the SPS experiments are described in several SHRP operational guides and memorandums.

For SPS test sites, field tests are performed for in situ density determination of the subgrade, untreated granular base, dense-graded asphalt-treated base, and aphalt concrete surface. In addition, cores and samples are taken from the different pavement layers for laboratory testing and determination of the properties of these materials. For SPS test sites involving rehabilitation with an overlay, sampling and testing of the materials of the existing pavement and the overlay are performed. As several test sections are constructed at each test site, the sampling and testing plan must be tailored to the specific features constructed on each project. Consequently, the sampling and testing plan for one site may vary from that required for another site, but it should still provide the information needed to characterize the pavement material properties and the variations in these properties between and within the test sections.

For test sites that include existing or new asphalt concrete surface layers (SPS-1, 5, 6, 8, and 9), tests are performed on samples obtained from each asphalt concrete layer and on extracted aggregate and asphalt cement samples. Tests are performed on the asphalt concrete samples to determine core condition and thickness, bulk specific gravity, maximum specific gravity, asphalt content (extraction), moisture susceptibility, creep compliance, resilient modulus, and tensile strength. Also, tests are performed on extracted aggregate samples to determine specific gravity of coarse aggregate, specific gravity of fine aggregate, type and classification of coarse aggregate, type and classification of fine aggregate, gradation of aggregate, fine aggregate particle shape, and coarse aggregate particle shape. In addition, tests are performed on extracted asphalt cement samples to determine abson recovery, penetration at 77°F and 115°F, and specific gravity and viscosity at 77°F, 140°F, and 275°F.

For test sites involving the evaluation of asphalt concrete mixture specifications (SPS-9), tests are performed to determine binder properties (shear rheometer, bending beam, and direct tension) and mix properties (simple shear, dissipated energy, and indirect tensile creep). These properties are determined at time of placement and at different ages up to 14 years after construction.

For test sites that include existing or new portland cement concrete surface layers (SPS-2, 6, 7, 8, and possibly 9), tests are performed on samples obtained from each layer to determine compressive strength, splitting tensile strength, coefficient of thermal expansion, static

modulus of elasticity, unit weight, core condition and thickness, air content of hardened concrete, and flexural strength.

For test sites that include bonded concrete layers (SPS-7), tests are performed on pavement overlay cores to determine the interface bond strength.

For test sites that include unbound granular base layers (e.g., SPS-1 and SPS-2), tests are performed to determine particle size analysis, washed sieve analysis, atterberg limits, moisture-density relations, resilient modulus, classification, permeability, and natural moisture content.

For test sites that include bound (treated) base and subbase layers, tests are performed to determine type and classification of material and treatment, compressive strength (for pozzolanic/cementitious materials), dynamic modulus at 77°F (for asphalt-treated materials), and resilient modulus (for hot-mix asphalt concrete).

For test sites that include asphalt-treated base layers (e.g., SPS-1 and SPS-2), tests are performed to determine core condition and thickness, bulk specific gravity, maximum specific gravity, asphalt content (extraction), moisture susceptibility, and resilient modulus.

For test sites that include a lean concrete base (e.g., SPS-2), tests are performed to determine core condition and thickness, compressive strength, and splitting tensile strength.

For test sites that include a permeable asphalt-treated base (SPS-1 and SPS-2), tests are performed to determine core condition and thickness, bulk specific gravity, maximum specific gravity, asphalt content (extraction), moisture susceptibility, and resilient modulus.

For subgrade, tests are performed to determine sieve analysis, hydrometer to 0.001 mm, atterberg limits, classification, moisture-density relations, resilient modulus, unit weight, natural moisture content, and unconfined compressive strength.

In addition to the material properties determined from cores or samples extracted from the pavement, properties of the as-delivered portland cement concrete and asphalt concrete are determined from samples taken from the ready-mix truck or asphalt plant. For certain experiments, samples of the portland cement concrete surface, the lean concrete base, and the asphalt concrete surface are obtained from the pavement at different ages for testing. Detailed information on the sampling and testing requirements is contained in another report.

Traffic Data

Traffic data include current estimates, historical data, and monitoring data. Current estimates have been provided by the participating agencies to help evaluate the suitability of the test site for inclusion in the SPS experiments. Also, participating agencies are required to provide traffic data pertaining to the test sections. Traffic monitoring requirements on SPS sites depend on the type of the experiment. The experiments on rehabilitation and

asphalt-aggregate mixture specifications (SPS-5, 6, 7, and 9) require continuous vehicle classification plus annual cycles of weigh-in-motion. The experiments on structural factors (SPS-1 and 2) require continuous weigh-in-motion. The experiment on environmental effects (SPS-8) requires continuous vehicle classification supported by portable weigh-in-motion on an as-needed basis. However, the experiments on maintenance (SPS-3 and 4) utilize data obtained from on-site General Pavement Studies (GPS) test sections.

Traffic data are collected and stored in a traffic database following the guidelines established in a guide on data collection for the Long-Term Pavement Performance (LTPP) studies.

Distress Data

Distress information is obtained through strip photography of the test sections. Also, rut depth measurements are performed using a photographic technique to measure the relative transverse profile. Manual distress recording is performed when automatic methods cannot be economically or practically employed. Distress data to be collected are described in the *SHRP Distress Identification Manual for the Long-Term Pavement Performance Studies.*[7] There are 16 distress types for asphalt concrete surface pavements, 16 distress types for jointed plain and reinforced concrete pavements, and 14 distress types for continuously reinforced concrete pavements. For the experiments on rehabilitation (SPS-5, 6, and 7), distress surveys are to be performed shortly prior to rehabilitation, shortly after rehabilitation, and periodically thereafter to establish the effect of rehabilitation on performance.

Profile Data

Profile measurements are obtained by K.J. profilometers employing noncontact sensors to provide profiles in the left and right wheel paths. In addition, other techniques are utilized when the use of profilometers becomes uneconomical or impractical. The test procedures are described in a manual for profile measurements.

Deflection Data

Deflection measurements are performed using dynatest falling weight deflectometers (FWDs) to record time histories of load and deflection pulses at several sensors. For the experiments on rehabilitation (SPS-5, 6, and 7), deflection measurements are obtained shortly prior to rehabilitation, shortly after rehabilitation, and periodically thereafter to establish the effect of rehabilitation on pavement strength. The test procedure and details of FWD testing are described in a manual for FWD testing. The specific details of FWD testing for each SPS experiment are described in several operational memorandums.

Friction Data

Friction (skid resistance) measurements are performed by the participating agency using the procedures and equipment normally employed by the agency. However, the locked-wheel skid trailer is recommended.

Climatic Data

Generally, climatic data are obtained from weather stations located in proximity to test sites. However, it is required that a weather station be installed on every test site for the experiments on structural factors (SPS-1 and SPS-2) and environmental effects (SPS-8) if representative weather stations are not located in proximity to the test site. Maximum, minimum, and mean daily temperatures, daily precipitation, and daily snowfall are considered essential data that must be obtained for each test site. Information about daily weather, wind speed, sunshine, sky coverage, and relative humidity is desirable and is to be collected when feasible.

Maintenance Data

Because maintenance of the SPS test sites may be performed for safety or other reasons, information on maintenance operations needs to be collected. The data elements are the same as those required for the GPS and are described in a guide on data collection for the LTPP studies.

Rehabilitation Data

Generally, no rehabilitation activity should be performed on the SPS test sites. However, if rehabilitation is performed for safety, structural, or other reasons, the affected test sections will be considered no longer part of the experiment. However, information on the type and details of the rehabilitation performed must be collected. Rehabilitation data elements are similar to those required for the GPS and are described in a guide on data collection for the LTPP studies.

7

Plans and Recommendations for Pavement Instrumentation

Introduction

In the past 10 years, a significant amount of research related to pavement instrumentation has been conducted both in the United States and in Europe. In the United States, the Federal Highway Administration has funded several demonstration projects to study pavement instrumentation; in Europe, the Organization of Economic Cooperation and Development (OCED) is coordinating a study of pavement instrumentation among several European countries. The instrumentation and monitoring of some of the test sections included in the experiments on structural factors (SPS-1 and SPS-2) and environmental effects (SPS-8) would provide a better understanding of the pavement response to traffic loading and environmental factors.

Because several agencies indicated an interest in installing instrumentation at the SPS-1 and SPS-2 test sites, an instrumentation plan was developed to ensure that this activity is performed in an organized and consistent manner to allow appropriate interpretation and utilization of test data. This plan was developed with consideration for the data elements to be measured, the type and location of sensors to be installed, redundancy and replication, sampling frequency, and the extent of instrumentation at the test sites.

This plan addresses the monitoring of pavement conditions and response to traffic loading and environmental changes. The use of reliable and durable sensors would help to ensure that they remain operational over a long period of time despite the effects of traffic and climate. A certain level of redundancy needs to be incorporated in the instrumentation plan to compensate for possible failure of some of the sensors. Also, replication of sensors at different locations in a test section would help account for variability within the test section and between sensors. The frequency of sampling depends on the type of measurement. While some sensors may need to be monitored over several years, monitoring of other sensors for a short time may be adequate. Because of the different design features incorporated in test sections at each site, temperature- and moisture-related data need to be monitored for each test section. Although some of the sensors could be installed within the monitoring length of the test sections during construction, locating all instrumentation outside the monitoring length of the test sections would avoid disturbance of the pavement materials within the monitoring length.

A discussion of various sensors that have been used in the past for pavement instrumentation is given in Federal Highway Administration Report No. FHWA-RD-89-084, *Instrumentation for Flexible Pavements*.[8] In addition, the proceedings of the *Symposium on State of the Art of Pavement Response Monitoring Systems for Roads and Airfields*[9] held in March 1989 provide a comprehensive review of the state of the art of pavement instrumentation technology. Recent field installations have provided and continue to provide valuable information on the performance of specific sensors and their reliability under long-term field exposure.

The pavement instrumentation plan is intended to assist in pavement performance investigations. The installation of pavement instrumentation is labor intensive, and when instrumentation is installed in new pavements a cooperative working relationship with the contractor is required. Subsequent data collection and analysis can also be labor intensive, and gathering more data is not necessarily an advantage. It is therefore necessary that the pavement instrumentation and data collection plan be developed for specific objectives and that it provide adequate details.

Instrumentation Plan for the Experiment on Structural Factors for Flexible Pavements

Each test site included in the experiment on structural factors for flexible pavements (SPS-1) includes 12 test sections constructed with different layer materials and thicknesses. Each test section consists of three or four different layers. The instrumentation plan requires that sensors be installed in the subgrade, in the dense-graded untreated base, in the asphalt-treated base, and in the asphalt concrete surface layer. No instrumentation is proposed for the permeable asphalt-treated base layer.

The objective of in-pavement instrumentation is to obtain data on pavement condition and response to traffic loading and environmental effects to help develop improved distress and design models. For example, in-pavement instrumentation data can be used to evaluate climatic models, characterize properties of the pavement layers, and correlate seasonal pavement behavior with in situ pavement condition. Also, in-pavement instrumentation will provide data to identify the range and spectrum of pavement response to traffic loading and environmental changes and thus help evaluate mechanistic analysis procedures for flexible and rigid pavements. To accomplish this objective, the pavement instrumentation plan should consider the following items:

- Measurement of pavement condition parameters such as temperature, moisture content, water table, and frost depth.

- Measurement of pavement response to controlled traffic loading and known environmental conditions.

- Measurement of pavement response to traffic loading and environmental changes over an extended period of time encompassing different seasons.

- Determination of the effect of different categories of traffic loading (i.e., axle type and configuration, tire pressure, and axle spacing) on pavement response.

- Determination of the effect of pavement design and construction parameters on pavement response to traffic loading and environmental conditions.

Ideally, a high level of redundancy should be incorporated into the instrumentation plan and several replicate locations within a test section should be instrumented. However, incorporating a high level of redundancy and replication requires additional sensors and increased installation and monitoring effort, thus adding considerably to the cost of instrumentation. For this reason, the instrumentation plan assumes a single replication. However, participating agencies may install additional replicate sensors or additional sensors to provide redundancy or other types of information.

Subgrade Instrumentation

Instrumentation of the subgrade is required for measurement of temperature, moisture content, water table, frost depth, and vertical displacement. In addition, measurement of the vertical pressure at the top of the subgrade may be desired.

Temperature measurements should be made at three locations within the subgrade—at depths of 6, 30, and 60 inches below the top of the subgrade. Sensors should be placed along the middle of the outer lane, with a replicate set of sensors placed 10 feet away.

Moisture content measurements should be made every 6 inches from the subgrade surface to a depth of 60 inches below the top of the subgrade or to the depth of the water table at locations adjacent to the temperature sensors. Soil moisture content should be measured by means of either neutron scattering or gamma attenuation. The neutron scattering procedure requires access to the subgrade by means of a single tube in which a probe is inserted to obtain measurements at different depths. The gamma attenuation procedure requires the use of two parallel access tubes to obtain measurements at different depths. If these procedures are used, the access tubes should be located along the middle portion of the outside lane to minimize damage to the caps covering these tubes.

An observation well should be installed along the middle of the outer lane to manually measure the depth to the water table. The well depth may range from 10 to 15 feet and shall be determined for each site based on the local groundwater conditions.

A casing tube should be installed along the middle of the outer lane to a depth of 6 feet. The frost depth will be measured by a clear polyethylene tube filled with a solution of methylene blue or a tube filled with glass balls and fluorescein (OCED procedure).

Vertical displacement of the subgrade should be measured only at the top of the subgrade, using a single-depth deflectometer and geophones. Two deflectometers and two geophones, located under the outer wheel path 30 inches away from the lane edge, should be used to

provide replication. If displacement response is to be measured for noncontrolled actual traffic, a series of sensors will need to be installed across the width of the average wheel path to ensure that peak/critical displacements are recorded.

Soil suction measurements should be made adjacent to the locations of the temperature measurements. These sensors can also be used to provide an indication of moisture content.

It is desirable to measure the vertical pressure at the top of the subgrade. For this purpose, two pressure cells should be located under the outer wheel path 30 inches away from the lane edge to provide replication. If vertical pressure response is to be measured for noncontrolled actual traffic, a series of cells will need to be installed across the width of the average wheel path to ensure that peak/critical pressures are recorded.

Instrumentation of Dense-Graded Aggregate Base

Instrumentation of the dense-graded aggregate base layers is required for measurement of temperature, moisture content, and vertical displacement.

Temperature measurements should be made at mid-depth of each layer. The sensors should be placed along the middle of the outer lane and replicated 10 feet away.

Moisture content measurements should be made at mid-depth of each layer, using either neutron scattering or gamma attenuation.

Geophones should be used to measure vertical displacement of the base/subbase at the surface of each layer. Two geophones, located under the outer wheel path 30 inches away from the lane edge, should be used to provide replication. If displacement response is to be measured for noncontrolled actual traffic, a series of sensors will need to be installed across the width of the average wheel path to ensure that peak/critical displacements are recorded.

Instrumentation of Asphalt-Treated Base

Instrumentation of the asphalt-treated base course is required for measurement of temperature, vertical displacement, and longitudinal strain.

Temperature and vertical displacement should be measured in the same manner as for the dense-graded aggregate base layers.

Strain measurements should be made at the bottom of the asphalt-treated base, using strain gauges placed under the outer wheel path 30 inches away from the lane edge. Two gauges should be used to provide replication; they should be placed in a longitudinal orientation to measure the longitudinal strain. Where strain response is to be measured for noncontrolled actual traffic, a series of gauges will need to be installed across the width of the average wheel path to ensure that peak/critical strains are recorded.

Vertical pressure measurements, if desired, should be made at the top of the base or subbase layer. Two pressure cells, located under the outer wheel path 24 inches away from the lane edge, shall be used to provide replication. Where vertical pressure response is to be measured for noncontrolled actual traffic, a series of cells will need to be installed across the width of the average wheel path to ensure that peak/critical pressures are recorded.

Instrumentation of Asphalt Concrete Surface

Instrumentation of the asphalt concrete surface is required for measurement of temperature, vertical displacement, and longitudinal strain.

Temperature measurements should be made at depths of 1, 2, and 3½ inches below the surface. In addition, for the 7-inch-thick asphalt concrete surface layer, temperature measurements should be made at 6½ inches below the surface. Sensors should be placed along the middle of the outer lane and a replicate set of sensors should be placed at a distance of 10 feet.

Vertical displacement should be measured at the surface of the layer, using a single-depth deflectometer. Two deflectometers, located under the outer wheel path 30 inches away from the lane edge and 10 feet apart, should be used to provide replication. Where displacement response is to be measured for noncontrolled actual traffic, a series of sensors will need to be installed across the width of the average wheel path to ensure that peak/critical displacements are recorded.

Strain measurements should be made at the bottom of the asphalt concrete surface layer, using strain gauges placed under the outer wheel path 24 inches away from the lane edge. Two gauges should be used to provide replication; they should be placed in a longitudinal orientation to measure the longitudinal strain. Where strain response is to be measured for noncontrolled actual traffic, a series of gauges will need to be installed across the width of the average wheel path to ensure that peak/critical strains are recorded.

Instrumentation Plan for the Experiment on Structural Factors for Rigid Pavements

Although the experiment on structural factors for rigid pavements (SPS-2) addresses doweled and undoweled jointed plain and reinforced concrete pavements, the instrumentation plan is intended for the test sections of doweled jointed plain concrete pavements. Each test site included in this experiment includes 12 test sections constructed with different layer materials and thicknesses. Each test section consists of three or four different layers. The instrumentation plan requires that sensors be installed in the subgrade, in the dense-graded untreated base, and in the concrete surface layer.

Subgrade Instrumentation

Instrumentation of the subgrade is required for measurement of temperature, moisture content, water table, frost depth, vertical displacement, and vertical pressure at the top of the subgrade. The location and details of the sensors required for these measurements are the same as those described for subgrade instrumentation for the experiment on structural factors for flexible pavements. No instrumentation is proposed for the permeable asphalt-treated base or lean concrete base layers.

Instrumentation of Dense-Graded Aggregate Base

Instrumentation of the dense-graded aggregate base is required for measurement of temperature, moisture content, and vertical displacement. The location and details of the sensors required for these measurements are the same as those described for instrumentation of the dense-graded aggregate base for the experiment on structural factors for flexible pavements.

Instrumentation of the Portland Cement Concrete Surface

Instrumentation of the portland cement concrete surface is required for measurement of temperature, vertical displacement, joint width, and concrete strain.

Temperature measurements should be made at depths of 1, 2, 4, and 7½ inches for the 8-inch-thick slabs and at depths of 1, 2, 4, 7, and 10 inches for the 11-inch-thick slabs. Sensors should be placed along the middle of the outer lane and a replicate set of sensors should be placed at a distance of 10 feet.

Vertical displacement should be measured at three locations: corner; mid-slab edge; and slab interior along the outer wheel path, 30 inches from the lane edge. The sensors required for these measurements are the same as those for vertical displacement measurement for the experiment on structural factors for flexible pavements. At each location, vertical displacement should be measured at the surface of the concrete slab by means of a single depth deflectometer. The measurements should be made in two adjacent slabs to provide replication. Because corner and mid-slab edge deflections are two of the critical deflection responses, additional deflectometers are not necessary for measuring the deflection response due to noncontrolled actual traffic.

Joint width should be measured using a joint width transducer. A total of five consecutive joints should be instrumented. The transducers shall be placed externally along the outside lane edge (vertical face) of the pavement.

Concrete strain measurements need to be performed to provide information on the volume and length changes that take place in the concrete with time due to drying, shrinkage, and temperature change and to determine the concrete slab response to traffic loading.

Long-term length changes should be measured with embedment gauges. Three gauges should be installed along the middle of the outer lane at a location 3 feet from a joint and at mid-slab edge. The mid-slab edge is a control location since it is considered a location for zero strain in the longitudinal direction. Three gauges should be used at each station; they should be placed at mid-depth, 2 inches below the slab surface and 2 inches above the slab bottom. All gauges should be oriented longitudinally. Instruments should be placed in two adjacent slabs to provide replication. To measure traffic load-related response, it is proposed that gauges be used at the surface of the pavement and at the slab bottom. Gauges should be located at mid-slab at lane-edge and 30 inches from the edge of the outer lane. The lane-edge surface gauge should be located 2 inches from the edge of the lane, and the lane-edge bottom gauge should be located along the vertical face of the pavement 1 inch from the slab bottom. A replicate set of gauges should be located 3 feet away. The gauges should be oriented longitudinally. Since mid-slab longitudinal edge stress is considered to be the critical slab strain, additional gauges are not necessary to measure the peak/critical strain response to noncontrolled actual traffic.

Instrumentation for the Experiment on Environmental Effects

The experiment on environmental effects (SPS-8) incorporates flexible or rigid pavement structures that are identical to some of the test sections included in the experiments on structural factors. Therefore, the proposed instrumentation for these sections is identical to that described for the other experiments.

Measurement Parameters and Sensors

Parameters commonly measured by pavement instrumentation include response-type and condition-type parameters. Response-type parameters include strain, pressure/stress, and displacement/deformation. Condition-type parameters relate to environmental factors and include temperature, moisture, water table, frost depth, and soil suction.

The response-type parameters are highly sensitive to the transverse positioning within the pavement cross-section and can be measured in a controlled-loading study or over a period of time for actual traffic loading. For the controlled-loading case, only a few sensors located along the vehicle wheel path are required to obtain the critical values of the responses. However, obtaining the critical responses to actual traffic loading would be very difficult, as it would require a large number of each type of sensor to provide sufficient coverage across the width of the average wheel path.

The condition-type parameters are not sensitive to the transverse positioning within the pavement cross section. However, positioning these sensors along the average wheel path would allow a direct correlation of these parameters with the response-type parameters.

Two instrumentation schemes, designated Level 1 and Level 2, have been identified. The Level 1 scheme incorporates the instrumentation required for measuring temperature, moisture, water table, frost depth, and soil suction. Knowledge of these condition-type parameters is considered essential in quantifying the in situ condition of the various pavement layers.

The Level 2 scheme incorporates the instrumentation required for the Level 1 scheme and other instrumentation measuring selected response-type parameters. These response-type parameters include vertical displacement, asphalt concrete layer strain, concrete layer strain, and vertical pressure. The response-type parameters can be measured under controlled loading as well as under actual (noncontrolled) loading. The availability of response-type parameters will allow an evaluation of the effects of various design and construction features and will form the basis for the calibration or verification of mechanistic pavement analysis models.

A summary of the specific parameters required for the two instrumentation schemes is given in Table 16.

Instrumentation schemes can vary from simple schemes incorporating a single type of sensor with its customized integrated signal conditioning, data display, and possibly data storage units to comprehensive schemes involving a wide range of sensors, signal conditioning units, data acquisition units, data display and storage units, data processing units, and possibly data transmission units. A high-speed data acquisition system is essential for monitoring responses under moving traffic loads.

It is recommended that most of the sensors be installed at the time of construction. However, some of the sensors may be installed after construction. These sensors include single-depth and multi-depth deflectometers, strain gauges at the surface of concrete pavements, horizontal joint/crack opening transducers, strain gauges on carrier blocks or cores for flexible pavements, and moisture and temperature sensors.

The pavement response to traffic loading can be measured for actual (noncontrolled) traffic as well as for controlled loading. Controlled loading tests utilize truck type, axle load type and weight, tire pressure, tire configuration (single vs. dual tires), lateral positioning of tires, and vehicle speed. In addition, controlled loading tests permit repeat testing at different times of the day and thus identify temperature/curling effects on concrete pavements and temperature effects on asphalt concrete surface courses.

The controlled loading tests are essential for understanding the mechanistic response of pavements and for the calibration and verification of pavement analysis models. It is recommended that these tests be conducted seasonally to provide information on the effects of environmental changes on pavement performance.

Table 16. Measurement parameters.

Pavement Layer	Measurement Parameter	
	Level 1	Level 2
Subgrade	Temperature Moisture content Soil suction Water table Frost depth	Temperature Moisture content Soil suction Water table Frost depth Vertical displacement Vertical pressure[1]
Base/subbase course	Moisture content[2] Temperature	Moisture content[2] Temperature Vertical displacement Vertical pressure[1] Strain
Asphalt concrete surface	Temperature with depth	Temperature with depth Vertical displacement Strain[3]
Portland cement concrete surface	Temperature with depth	Temperature with depth Joint width Vertical displacement[4] Strain

[1] Not strongly recommended.
[2] For untreated dense-graded aggregate base only.
[3] For dense-graded asphalt-treated base only.
[4] Includes curl measurement.

Instrumentation Scheme and Plan

Each test site for the experiments on structural factors will include a minimum of 12 test sections constructed over a minimum length of about 2 miles. The experiment on environmental effects requires only two test sections. Therefore, variations in condition-type parameters are expected between test sections.

The instrumentation identified in the Level 1 instrumentation scheme should be installed in each test section to monitor the pavement condition parameters. Because drainage conditions and surface and base thicknesses vary from one test section to another, information related to the moisture and temperature regime within each pavement section will aid in identifying the causes of behavior and performance differences between the various test sections.

Where data collection is to be performed on a continuous basis, a source of (electric) power will be needed over the entire length of the project. Also, because the length of the cable from the sensor to the signal conditioning unit cannot exceed a few hundred feet, several signal conditioning units may be required at each project.

It is impractical to measure pavement response-type parameters in all test sections using the instrumentation identified in the Level 2 instrumentation scheme. Therefore, it is proposed that only four test sections be monitored at each test site using the Level 2 instrumentation scheme. For the experiment on structural factors for flexible pavements (SPS-1), instrumentation should be provided in Sections 1, 6, 9, and 10 or Sections 13, 18, 21, and 22, depending on the experimental set to be constructed at the site. For the experiment on structural factors for rigid pavements (SPS-2), instrumentation should be provided in Sections 1, 5, 8, and 12 or Sections 13, 17, 20, and 24, depending on the experimental set to be constructed at the site.

To avoid disturbing the constructed paving material, no instrumentation should be placed within the 500-foot monitoring length of the test sections. Instrumentation should be placed within a 50-foot length at one end of a test section, and no field sampling should be carried out within 10 feet of the instrumentation.

For the Level 1 instrumentation scheme, the sensors should be monitored periodically. Temperature and moisture content data should be recorded hourly if automatically obtained or monthly if manually obtained. Water table and frost depth measurements should be obtained monthly, but more frequently during winter months if possible.

Level 2 instrumentation monitoring should be conducted several times in a 1-week period during the spring thaw and again at midsummer. During these 1-week periods, responses to noncontrolled traffic should be measured over a period of at least 3 days. Responses to controlled traffic (known loading and wheel positioning) should be measured over a period of 1 day. The controlled-loading tests should be repeated several times during the test day to establish the effects of temperature variations on pavement response.

8

Status of Test Sites

Efforts to identify test sites for the Specific Pavement Studies (SPS) experiments and to obtain highway agencies' commitment began in March 1989 with requests for participation in the experiments on maintenance (SPS-3 and 4). Requests for participation in the experiments on rehabilitation of asphalt concrete and jointed portland cement concrete pavements (SPS-5 and 6) were issued in November 1989. In February 1990, requests for nominations of test sites for the experiments on structural factors (SPS-1 and 2) and bonded concrete overlays of concrete pavements (SPS-7) were made. In August 1991, nominations for test sites for the experiment on environmental effects (SPS-8) were sought from state and provincial highway agencies and from the National Park Service and Forest Service through the Federal Highway Administration's Federal Lands Highway Division Offices. Participation in the experiment on asphalt-aggregate mixture specifications was first sought in February 1992.

Based on the request for nominations and other solicitations, a number of test sites have been identified and approved. Some of these test sites have been constructed. In addition, potential candidates have been identified. A status summary of the experiments as of May 5, 1992, is presented here.

Experiment on Structural Factors for Flexible Pavements

The experiment on structural factors for flexible pavements (SPS-1) requires 16 test sites distributed equally in the four climatic regions. Half of the test sites require fine-grained subgrade soil and half require coarse-grained subgrade soil. As of May 5, 1992, six sites had been approved and one site had been nominated but was still under evaluation. In addition, 10 sites were regarded as potential candidates for which nominations were anticipated. Table 17 summarizes the status of this experiment, lists the participating highway agencies, and shows the number of test sites needed for each climatic region and subgrade type. As the table indicates, even if all 10 potential candidate sites are nominated and approved, 3 more sites will be required to complete the experiment.

Table 17. Status of the experiment on structural factors for flexible pavements.

Subgrade Type	Wet-Freeze	Wet-No Freeze	Dry-Freeze	Dry-No Freeze
Fine	*(2 projects needed)*	*(2 projects needed)*	*(2 projects needed)*	*(2 projects needed)*
	MI (A) (93)	AL (A) (92)	KS (E)	OK (P)
	VA (A) (93)	TN (P)		
	IA (A) (92)	AR (P)		
	OH (P)			
Coarse	*(2 projects needed)*	*(2 projects needed)*	*(2 projects needed)*	*(2 projects needed)*
	DE (A) (93)	FL (P)	WA (P)	AZ (A) (93)
		TX (P)	ID (P)	CA (P)
				NM (P)

A = Approved, year for which construction was shown in parentheses.
E = Nominated, under evaluation.
P = Potential, nomination is anticipated.

May 5, 1992

Experiment on Structural Factors for Rigid Pavements

The experiment on structural factors for rigid pavements (SPS-2) also requires 16 test sites distributed equally in the four climatic regions. Half of the test sites require fine-grained subgrade soil and half require coarse-grained subgrade soil. As of May 5, 1992, five sites had been approved and one site had been nominated but was still under evaluation. In addition, six sites were regarded as potential candidates for which nominations were anticipated. Table 18 summarizes the status of this experiment, lists the participating highway agencies, and shows the number of test sites needed for each climatic region and subgrade type. As the table indicates, if all six potential candidate sites are nominated and approved, five more sites will be required to complete the experiment.

Experiment on Maintenance Treatment of Flexible Pavements

As of May 5, 1992, 81 test sites had been approved and constructed for the experiment on maintenance treatment of flexible pavements (SPS-3). Table 19 lists the test sites constructed in each climatic region and the participating highway agencies. No additional test sites are being sought for this experiment.

Experiment on Maintenance Treatment of Rigid Pavements

The experiment on maintenance treatment of rigid pavements (SPS-4) requires test sites of jointed plain and jointed reinforced concrete pavements in the different climatic regions. As of May 5, 1992, 47 test sites had been approved, 28 of which had been constructed. The remaining 19 test sites were scheduled for construction in 1992. Of these sites, 33 are jointed plain and 14 are jointed reinforced concrete pavements. Table 20 lists the approved test sites in each climatic region and the participating highway agencies. No additional test sites are being sought for this experiment.

Experiment on Rehabilitation of Asphalt Concrete Pavements

The experiment on rehabilitation of asphalt concrete pavements (SPS-5) requires 16 test sites distributed equally in the four climatic regions. As of May 5, 1992, 10 sites had been constructed and 4 more sites had been approved. In addition, nomination of two potential sites was anticipated. Table 21 lists the constructed, approved, and potential test sites in each climatic region and the participating highway agencies. As the table indicates, if the two potential candidate sites are nominated and approved, one additional test site will be required to complete the experiment.

Table 18. Status of the experiment on structural factors for rigid pavements.

Subgrade Type	Wet-Freeze	Wet-No Freeze	Dry-Freeze	Dry-No Freeze
Fine	*(2 projects needed)*	*(2 projects needed)*	*(2 projects needed)*	*(2 projects needed)*
	MI (A) (93)	AR (P)	KS (A) (92)	TX (P)
	OH (P)	LA (P)	ND (A) (T) (93)	
	IA (P)			
Coarse	*(2 projects needed)*	*(2 projects needed)*	*(2 projects needed)*	*(2 projects needed)*
	DE (A) (93)		CO (A) (93)	AZ (A) (93)
			CA (P) (93)	

A = Approved, year for which construction was scheduled is shown in parentheses.
P = Potential, nomination is anticipated.
T = Tentative, subject to completion of evaluation.

May 5, 1992

Table 19. Status of the experiment on preventive maintenance effectiveness for flexible pavements.

Wet-Freeeze	Wet-No Freeze	Dry-Freeze	Dry-No Freeze
IL (2)*	FL (3)*	CO (2)*	AZ (4)*
MN (4)*	OK (2)*	KS (2)*	TX (9)*
NY (2)*	TX (5)*	NV (3)*	CA (1)*
PA (2)*	AL (3)*	UT (3)*	OK (1)*
KY (2)*	TN (3)*	WY (2)*	
MI (4)*	AR (1)*	ID (3)*	
MO (2)*	MS (1)*	WA (2)*	
IA (1)*	WA (1)*	MT (1)*	
MD (1)*		NE (1)*	
IN (1)*		Sask. (2)*	
VA (1)*		Man. (1)*	
Ont. (2)*			
Que. (1)*			

Numbers in parentheses indicate number of test sites.
* Constructed.

Table 20. Status of the experiment on preventive maintenance for rigid pavements.

Pavement Type	Wet-Freeze	Wet-No Freeze	Dry-Freeze	Dry-No Freeze
Plain	IA (2)*	WA (2)	CO (1)	CA (2)*
	IN (1)*, (1)	OK (1)*	KS (2)*	AZ (1)*
	WI (2)	TX (1)*	NE (3)	TX (1)*
	KY (1)*		UT (2)*, (3)	
	OH (1)		ND (1)	
	Que. (1)		NV (1)*, (1)	
			SD (1)*	
			WA (1)*	
Reinforced	IL (2)	AR (3)*		
	MO (2)*	MS (1)*		
	OH (1)	TX (3)*		
	PA (2)*			

Numbers in parentheses indicate number of test sites.
* Constructed.

May 5, 1992

Table 21. Status of the experiment on rehabilitation of flexible pavements.

Wet-Freeze	Wet-No Freeze	Dry-Freeze	Dry-No Freeze
(4 projects needed)	*(4 projects needed)*	*(4 projects needed)*	*(4 projects needed)*
MN (A)*	MS (A)*	CO (A)*	AZ (A)*
MD (A) (92)	AL (A)*	MT (A)*	CA (A)*
NJ (A) (92)	TX (A)*	Man. (A)*	TX (P)
	GA (A) (92)	Alta. (A)*	NM (P)
	FL (A) (93)		

* Constructed.
A = Approved, year for which construction was scheduled is shown in parentheses.
P = Potential, nomination is anticipated.

May 5, 1992

Experiment on Rehabilitation of Jointed Portland Cement Concrete Pavements

The experiment on rehabilitation of jointed portland cement concrete pavements (SPS-6) requires 22 test sites: 8 sites of jointed reinforced concrete pavements and 14 sites of jointed plain concrete pavements. The jointed reinforced concrete pavement sites are required only in the wet climatic regions; the plain concrete pavement sites are required in all four climatic regions. As of May 5, 1992, five sites had been constructed and seven more sites had been approved. In addition, nomination of two potential sites was anticipated. Table 22 lists the constructed, approved, and potential sites of jointed plain and jointed reinforced concrete pavements in each climatic region and the participating highway agencies. As the table indicates, if the two potential candidate sites are nominated and approved, one jointed reinforced and eight jointed plain concrete pavements will be required to complete the experiment.

Experiment on Bonded Concrete Overlays

The experiment on bonded concrete overlays of concrete pavements (SPS-7) requires 12 test sites: 8 sites of jointed concrete pavements and 4 sites of continuously reinforced concrete pavements. As of May 5, 1992, three sites had been constructed and one more site had been approved. In addition, nomination of a potential site was anticipated. Table 23 lists the constructed, approved, and potential test sites of jointed and continuously reinforced concrete pavements in each climatic region and the participating highway agencies. As the table indicates, if the potential candidate site is nominated and approved, six jointed and two continuously reinforced concrete pavements will be required to complete the experiment.

Experiment on Environmental Effects

The experiment on environmental effects in the absence of heavy loads (SPS-8) requires 12 test sites each of flexible and rigid pavements distributed equally in the four climatic regions. As of May 5, 1992, two sites had been approved and two potential sites had been identified for the rigid pavement portion of the experiment. In addition, eight potential test sites had been identified for the flexible pavement portion of the experiment. Table 24 lists the approved and potential test sites of flexible and rigid pavements and the participating highway agencies. As the table indicates, if all the 10 potential candidate sites are nominated and approved, 6 test sites will be required to complete the flexible pavement portion of the experiment and 8 test sites will be required to complete the rigid pavement portion of the experiment.

Table 22. Status of the experiment on rehabilitation of jointed portland cement concrete pavements.

Pavement Type	Wet-Freeze	Wet-No Freeze	Dry-Freeze	Dry-No Freeze
Reinforced	*(4 projects needed)*	*(4 projects needed)*	*(No projects needed)*	*(No projects needed)*
	IA (A)*	OK (A) (92)	-	-
	IL (A)*	AR (A) (92)	-	-
	MI (A)*	LA (P)	-	-
	MO (A) (92)		-	-
	PA (A) (92)		-	-
Plain	*(4 projects needed)*	*(4 projects needed)*	*(4 projects needed)*	*(4 projects needed)*
	IN (A)*	TN (A) (92)	AZ (A)*	
		FL (P)	CA (A) (92)	
			SD (A)	

* = Constructed.
A = Approved, year for which construction was scheduled is shown in parentheses.
P = Potential, nomination is anticipated.

May 5, 1992

Table 23. Status of the experiment on bonded concrete overlays.

Pavement Type	Wet-Freeze	Wet-No Freeze	Dry-Freeze	Dry-No Freeze
Jointed	*(2 projects needed)*	*(2 projects needed)*	*(2 projects needed)*	*(2 projects needed)*
	MO (A)*	AR (P)		
Continuously Reinforced	*(1 project needed)*	*(1 project needed)*	*(1 project needed)*	*(1 project needed)*
	MN (A)*	LA (A)*		
	IA (A) (92)			

* = Constructed.
A = Approved, year for which construction was scheduled is shown in parentheses.
E = Nominated, under evaluation.
P = Potential, nomination is anticipated.

May 5, 1992

Table 24. Status of the experiment on environmental effects.

Pavement Type	Wet-Freeze	Wet-No Freeze	Dry-Freeze	Dry-No Freeze
Flexible	*(3 projects needed)*	*(3 projects needed)*	*(3 projects needed)*	*(3 projects needed)*
	OH (P)		SD (P)*	NM (P)
	PEI (P)		UT (P)	
			MT (P)	
			WA* (P)	
			NV* (P)	
Rigid	*(3 projects needed)*	*(3 projects needed)*	*(3 projects needed)*	*(3 projects needed)*
	IA (A) (93)		CO (A) (93)	
	OH (P)			
	PA* (P)			

* = National Park Service or Forest Service road.
A = Approved, year for which construction was scheduled is shown in parentheses.
E = Nominated, under evaluation.
P = Potential, nomination is anticipated.

May 5, 1992

Experiment on Asphalt-Aggregate Mixture Specifications

The experiment on asphalt-aggregate mixture specifications (SPS-9) requires 82 test sites distributed in the 41 moisture-temperature combinations. A pilot test site was scheduled for construction in the spring of 1992 and four others were anticipated. However, because of the schedule for delivery of the mixture test equipment and related training activities, only pilot projects have been considered for 1992 and 1993 construction. Consequently, the majority of test sites will be projects scheduled for construction in 1994 and 1995.

Status Summary

As of May 5, 1992, 209 test sites had been identified for the SPS experiments. Of these, 127 test sites had been constructed and 47 had been nominated or approved. In addition, nominations for 35 test sites were anticipated. Table 25 lists the number of constructed, nominated or approved, and potential test sites for each experiment. If all the potential candidate test sites are nominated and approved, 40 test sites will still be needed to complete the experiments on structural factors (SPS-1 and 2), rehabilitation (SPS-5, 6, and 7), and environmental effects (SPS-8). In addition, some 200 test sites will be required for the experiment on asphalt-aggregate mixture specifications (SPS-9). No additional sites are sought for the experiments on maintenance treatment of flexible and rigid pavements (SPS-3 and 4).

Table 25. Status of SPS test sites.

Experiment	Constructed	Nominated or Approved	Potential	Total
SPS-1: Structural Factors for Flexible Pavements	-	7	10	17
SPS-2: Structural Factors for Rigid Pavements	-	6	6	12
SPS-5: Rehabilitation of Asphalt Concrete Pavements	10	4	2	16
SPS-6: Rehabilitation of Jointed PCC Pavements	5	7	2	14
SPS-7: Bonded PCC Overlays	3	1	1	5
SPS-8: Environmental Effects	-	2	10	12
SPS-9: Asphalt Mixtures and Innovations	-	1 (Pilot)	4	5
SPS-3: Maintenance Treatment of Flexible Pavements	81	-	-	81
SPS-4: Maintenance Treatment of Rigid Pavements	28	19	-	47

May 5, 1992

9

Key Products and Benefits

Introduction

The Specific Pavement Studies (SPS) experiments on structural factors, rehabilitation and environmental effects will include nearly 100 test sites with almost 1000 test sections. In addition, the experiments on maintenance and asphalt mixture specifications will include more than 200 test sites with over 700 test sections. As these test sections are monitored from their infancy, a comprehensive database will provide complete information on the construction, materials, traffic, environment, performance, and other features of these sections. This database will provide a reliable tool for accomplishing the objectives of the SPS and will assist other researchers and highway agencies in extending the SPS findings to specific situations of local or regional interest. This database will be part of the National Pavement Database to be maintained by the Transportation Research Board.

Products that will result from the SPS experiments can be grouped into three categories: general products, specific products, and other products. The general products are those common to all experiments, such as evaluation of existing design equations and the development of improved design procedures for new and reconstructed pavements. The specific products are those obtained from each experiment because of its unique features and study parameters, such as the effect of concrete strength or widened lanes on the performance of concrete pavements, the effect of open-graded permeable base on the performance of flexible and rigid pavements, and the effect of base type on performance of asphalt concrete pavements. Other products are those resulting from the supplementary studies performed at the test locations, such as the effect of tied concrete shoulders on the performance of rigid pavements, and those developed in the progress of work to assist in the performance evaluation of SPS test sections or characterization of the pavement materials used in the test sections.

General Products

Evaluation of existing design methods and performance equations is a key product of the SPS. For example, the American Association of State Highway and Transportation Officials pavement design equations can be evaluated by comparing the observed serviceability index as derived from profile and distress measurements against that predicted by the design

equations. Similarly, distress-predictive equations can be evaluated and their reliability in predicting specific distress types can be assessed.

The development of new or improved design equations is another key product of the SPS. This development may include the development of predictive equations for the significant distress and performance measures and the calibration of mechanistic-empirical models for design. For example, the findings on the influence of climate may permit a more accurate quantification of this factor for use in empirical design models. Similarly, validation, calibration and/or further development of the more fundamental (mechanistic) models can be achieved through improvements in the empirical relationships between mechanistic formulated variables and measures of pavement distress, such as the relationship between the computed horizontal strain on the bottom of the asphaltic concrete layer and the development of fatigue cracks as used in the Shell Research and Asphalt Institute design models.

Specific Products

Each SPS experiment will yield a number of products related to the significance of specific design features and their interaction with other variables, such as climate, on pavement performance. These products will be incorporated into the general products to develop improved design procedures for new and rehabilitated pavements and help identify the optimum pavement structure or rehabilitation option for a specific project.

Structural Factors for Flexible Pavements

The experiment on strategic study of structural factors for flexible pavements (SPS-1) will develop conclusions concerning the significance of in-pavement drainage and base type to pavement performance, the long-term effectiveness of in-pavement drainage, and the contribution of base and surface thickness to pavement performance.

The incorporation of in-pavement drainage as a design feature for flexible pavements is an illustration of the specific products of this experiment. Climatic conditions, subgrade soil, and pavement layer materials and thicknesses will influence the benefits and long-term effectiveness of in-pavement drainage systems. For example, use of in-pavement drainage may improve pavement performance in wet climates but not necessarily in dry climates. Also, for pavements constructed on fine-grained subgrade, in-pavement drainage may prove beneficial shortly after construction, but contamination with fines may make it less effective in future years. Consequently, the optimum design for some situations may require installation of in-pavement drainage in conjunction with thin pavement layers, while for other situations thick pavements without drainage may provide the optimum design.

Structural Factors for Rigid Pavements

The experiment on strategic study of structural factors for rigid pavements (SPS-2) will develop conclusions concerning the significance of in-pavement drainage and base type to pavement performance, the long-term effectiveness of in-pavement drainage, and the contribution of surface thickness, concrete strength, and widened lanes to the performance of doweled jointed portland cement concrete pavements. The experiment will also yield conclusions concerning the effects of these parameters on the performance of undoweled portland cement concrete pavements with skewed joints and jointed reinforced concrete pavements.

Knowledge about the use of widened lanes and high-strength concrete as design features for rigid pavements is a specific product of this experiment. Both widened lanes and increased concrete strength will improve pavement performance to varying degrees. In some situations, the contribution of a widened lane to improving pavement performance may outweigh that of increased concrete strength or slab thickness, while in other situations increased pavement thickness may contribute more to performance improvement. Consequently, a specific product of this experiment will be a methodology for establishing the optimum combinations of design features for each specific project.

Preventive Maintenance of Flexible Pavements

The experiment on preventive maintenance effectiveness of flexible pavements (SPS-3) will develop conclusions concerning the contribution of crack sealing, chip seals, slurry seals, and thin overlays to the performance of asphalt concrete pavements and the cost-effectiveness of these treatments.

The procedure for identifying the cost-effectiveness of the different preventive maintenance treatment alternatives for a specific project is the primary specific product of this experiment. For example, while crack sealing may provide a short-term improvement of pavement performance with a low investment, chip seals may provide a more cost-effective alternative in the long run. The experiment will provide the tools needed to compare the cost-effectiveness of the different treatments and a methodology for selecting the optimum option for each specific project.

Preventive Maintenance of Rigid Pavements

The experiment on preventive maintenance effectiveness of rigid pavements (SPS-4) will develop conclusions concerning the contribution of joint and crack sealing and undersealing to the performance of jointed portland cement concrete pavements and the cost-effectiveness of these treatments.

The procedure for identifying the cost-effectiveness of the different preventive maintenance treatment alternatives for a specific project is the primary specific product of this experiment. For example, while crack sealing may improve pavement performance with a low investment, joint sealing or undersealing may provide a more cost-effective alternative in the long run. The experiment will provide the tools needed to compare the cost-effectiveness of the different treatments and a methodology to help select the optimum option for each specific situation.

Rehabilitation of Asphalt Concrete Pavements

The experiment on rehabilitation of asphalt concrete pavements (SPS-5) will develop conclusions concerning the contribution of overlay thickness to pavement performance and the significance of asphalt concrete overlay material (virgin or recycled), pavement condition prior to overlay, and the contribution of pavement preparation prior to overlay to the performance of the rehabilitated pavement.

The ability to select the optimum strategy for rehabilitation of asphalt concrete pavements is the most significant specific products of this experiment. Several rehabilitation techniques and options requiring different initial investments may be feasible. However, each option will require a different level of maintenance and will have a different service life. The optimum strategy is the one incurring the lowest life-cycle cost while ensuring acceptable performance. The experiment will provide the data and tools necessary to compare the performance and economics of eight different rehabilitation options and a methodology for selecting the optimum option for each specific project.

Rehabilitation of Jointed Portland Cement Concrete Pavements

The experiment on rehabilitation of jointed portland cement concrete pavements (SPS-6) will develop conclusions concerning the contribution of an asphalt concrete overlay and the saw and seal technique to the performance of rehabilitated jointed portland cement concrete pavements; the significance of the extent of pavement preparation and/or restoration and pavement condition prior to rehabilitation, with or without an asphalt concrete overlay, to pavement performance; and the effectiveness of crack/break and seat as a rehabilitation option.

The procedure for determining the optimum option for rehabilitation of jointed portland cement concrete pavements is the key specific product of this experiment. For example, while limited restoration of pavements in poor condition may entail the lowest initial investment, such pavements may require frequent maintenance and eventually major rehabilitation. However, full concrete pavement restoration, with or without an asphalt concrete overlay, would require a larger initial investment but less frequent maintenance. The experiment will provide the tools needed to compare the performance and economics of seven different rehabilitation options and a methodology for selecting the optimum option for each specific project.

Bonded Concrete Overlays

The experiment on bonded concrete overlays (SPS-7) will develop conclusions concerning the contribution of the bonding grout and overlay thickness to the performance of rehabilitated pavement and the significance of pavement type and the method of pavement preparation prior to overlay placement to pavement performance.

Knowledge about the use of cement grout for bonding portland cement concrete overlays to existing concrete pavements is a specific product of this experiment. Although bonding agents have frequently been used for bonded concrete overlays, proper surface preparation may provide the conditions needed to ensure an adequate bond and thus eliminate the need for a bonding material. This design feature could result in substantial savings while ensuring acceptable performance. The experiment will identify the conditions under which bonded concrete overlays would provide a viable option for the rehabilitation of portland cement concrete pavements.

Environmental Effects

The experiment on the study of environmental effects in the absence of heavy traffic (SPS-8) will develop conclusions concerning environmentally induced serviceability loss, the contribution of environment and subgrade soil to distress of flexible and rigid pavements, and the effects of base and surface thickness variations on retarding environmentally driven distress.

The specific products of this experiment will include reliable inputs about environmentally induced serviceability loss and the effects of environment and subgrade type and properties on pavement distress and performance. These inputs will be incorporated into the general products to develop improved design procedures for flexible and rigid pavements.

Asphalt-Aggregate Mixture Specifications

The experiment on validation of Strategic Highway Research Program (SHRP) asphalt specifications and mix design and innovations in asphalt pavements (SPS-9) will validate the performance-based asphalt and asphalt-aggregate mixture specifications developed by SHRP asphalt research. Also, the experiment will provide a direct comparison, in terms of pavement performance, between highway agencies' existing specifications and SHRP's performance-based specifications. In addition, the experiment will provide means for evaluating stone matrix asphalt and other innovative materials and/or factors.

The development of performance-based specifications suited for different traffic and climate conditions is the key specific product of this experiment. These specifications will provide a mixture design and analysis system that can be adopted by highway agencies to ensure good performance and long service life. The development of design and construction procedures for stone matrix asphalt mixtures is another specific products of this experiment. These

developments will enable highway agencies to select appropriate asphalt-aggregate mixtures to meet anticipated traffic loads and climate conditions and ensure cost-effectiveness and good utilization of resources.

Other Products

In addition to the general and specific products anticipated from the SPS, other products will be generated. These other products can be grouped into four categories:

1. Test methods developed specifically for evaluation of materials, construction, and performance of SPS test sections. Examples of these methods are the test for determining the coefficient of thermal expansion of portland cement concrete, the test for determining bond shear strength between an existing portland cement concrete pavement and a portland cement concrete overlay, and a method for determining moisture damage present in asphalt concrete cores. These tests could become standard design and/or material acceptance tests.

2. Correlations between material properties determined by different methods. Because of the familiarity of highway agencies with certain monitoring and testing techniques, additional data will be generated by the participating states that might lead to correlations between the different methods. For example, results of the CBR test used by some states to characterize unbound granular base, subbase, and subgrade materials might show performance correlations with the resilient modulus test data obtain from the test sections. Similarly, correlations can be developed between different types of monitoring equipment, such as the falling weight deflectometer, the Dynaflect, and the Roadrater. Where correlations cannot be identified, the importance of the different test methods and/or montoring techniques for a particular purpose can be established.

3. Study of other features and materials. Because supplemental test sections will be constructed as an extension of the SPS test sites, an opportunity will exist to evaluate the contributions of new materials and other pavement details to pavement performance. For example, the effectiveness of tied concrete shoulders in improving pavement performance can be established if a number of supplemental test sections are constructed as an extension of the SPS-2 test sites. Similarly, the effectiveness of innovative materials and features in improving pavement performance can be evaluated as an extension of the SPS experiments.

4. Technology transfer. The interaction between SHRP, highway agencies, and SHRP contractors will provide a means for an exchange of ideas that should produce invaluable benefits to the participating organizations.

Benefits and Impact on Pavement Practices

The implementation of the SPS program will yield numerous benefits to the participating highway agencies and to other highway authorities in North America and abroad. The following are examples of the benefits that can easily be utilized by the highway agencies as a result of the SPS program:

- Reliable pavement design procedures and standards for new, reconstructed, and rehabilitated pavements.
- Reliable pavement distress and performance prediction models.
- Reliable maintenance procedures and standards.
- Improved cost allocation analysis.
- Improved life-cycle cost analysis.
- Improved pavement management systems.

These benefits will enable pavement engineers to identify the optimum pavement design and/or rehabilitation strategy for a given situation. This will result in changes in pavement design and construction practices that will lead to better performance at a lower cost. Potential changes in pavement design, construction, maintenance, and rehabilitation practices include the following:

- Optimized use of open-graded permeable bases for flexible and rigid pavements through new design procedures that determine long-term benefits.

- Increased use of recycled asphalt in overlays.

- Design procedures for new and reconstructed pavements that permit selection on a site-specific basis of design features to ensure suitable performance and long-term cost-efficiency. For example, dowels might be used in jointed concrete pavements when load transfer is shown to be a critical factor. Widened lanes, tied concrete shoulders, and concrete strength adjustments are other possible design features.

- Increased use of saw and seal for asphalt concrete overlays of jointed concrete pavements.

- Design procedures for crack/break and seat for restoring concrete pavements in poor condition.

- Increased use of bonded concrete pavements for strengthening portland cement concrete pavements to accommodate increased traffic levels.

- Timely rehabilitation of pavements with cost-efficient methods.

- Increased emphasis on timely preventive maintenance.

- Use of performance-based asphalt-aggregate mixture specifications suited for specific traffic and climate conditions.

These potential changes are expected to result in improved pavement performance and better utilization of resources.

10

Summary

The Specific Pavement Studies (SPS) program is one of two programs that constitute the Long-Term Pavement Performance (LTPP) studies portion of the Strategic Highway Research Program (SHRP). The SPS program involves studies of in-service pavements with varied design factors and site conditions. It consists of nine experiments that address certain aspects of the design, construction, maintenance, and rehabilitation of asphalt and concrete pavements. Study topics were identified by SHRP's advisory groups and highway agencies on the basis of *Strategic Highway Research Program Research Plans*. Topics include structural factors for flexible and rigid pavements, preventive maintenance effectiveness of flexible and rigid pavements, rehabilitation of asphalt concrete pavements, rehabilitation of jointed portland cement concrete pavements, bonded concrete overlays, environmental effects on asphalt and concrete pavements, and asphalt specifications and mix design. Study parameters for each SPS experiment are summarized in Table 26.

To ensure practical and implementable experiments, the experiment designs for the SPS experiments were developed in cooperation with state and provincial highway agencies and the Federal Highway Administration. Each SPS experiment requires a number of test sites located in different climatic regions. Each site contains a number of test sections that incorporate the different materials and details to be studied. The number of required test sites varies depending on the experiment and ranges from 12 for the experiment on bonded concrete overlays to 82 for the experiment on asphalt specifications and mix design. The number of test sections at each site also varies depending on the experiment and ranges from 2 for the experiment on environmental effects to 12 for the experiments on structural factors for flexible and rigid pavements.

Projects considered for inclusion in the SPS experiments must meet certain criteria. These criteria ensure that the performance of the test sections relative to each other is due to the design parameters incorporated in the experiment and not to external factors such as changes in subgrade and traffic pattern. Also, adherence to these criteria will ensure that differences in performance between test sections constructed with similar experimental parameters at different locations are primarily due to differences in climatic conditions and traffic levels. To ensure uniformity in construction and to obtain needed data, the participating agencies have agreed to perform several activities. To help the participating agencies perform these functions, SHRP has prepared a series of reports that outline guidelines for the different facets of participation, such as procedures for evaluating candidate projects, sampling and testing needs, and construction requirements.

Table 26. Study parameters for Specific Pavement Studies.

Experiment	Study Parameters
SPS-1: Structural Factors for Flexible Pavements	Subgrade type: Fine, coarse In-pavement drainage: Yes, no Base type: AGG, ATB, ATB/AGG (undrained sections); PATB/AGG, ATB/PATB (drained sections); Base thickness: 8, 12 inches (undrained sections); 8, 12, 16 inches (drained sections) Surface thickness: 4, 7 inches
SPS-2: Structural Factors for Rigid Pavements	Subgrade type: Fine, coarse In-pavement drainage: Yes, no Base type: AGG, LCB, PATB Slab thickness: 8, 11 inches Concrete strength: 550, 900 psi (flexural) Lane width: 12, 14 feet
SPS-3: Preventive Maintenance Effectiveness of Flexible Pavements	Subgrade type: Fine, coarse Pavement condition: Good, fair, poor Traffic rate: Low, high Structural capacity: Low, high
SPS-4: Preventive Maintenance Effectiveness for Rigid Pavements	Subgrade type: Fine, coarse Subbase type: Granular, stabilized Pavement type: JPCP, JRCP
SPS-5: Rehabilitation of Asphalt Concrete Pavements	Pavement condition: Fair, poor Surface preparation: Minimal, intensive (milling) Overlay material: Virgin, recycled Overlay thickness: 2, 5 inches

Table 26. Study parameters for Specific Pavement Studies (continued).

SPS-6: Rehabilitation of Jointed Portland Cement Concrete Pavements	Pavement type: JPCP, JRCP Pavement condition: Fair, poor Restoration method: Minimal, full CPR, crack & seat AC overlay: None (minimal and full CPR) 4 inches (minimal, full CPR, crack & seat) 8 inches (crack & seat)
SPS-7: Bonded Concrete Overlays	Pavement type: JPCP, JRCP, CRCP Surface preparation: Cold milling & sandblasting, shotblasting Bonding material: Neat cement grout, none Overlay thickness: 3, 5 inches
SPS-8: Environmental Effects in the Absence of Heavy Loads	Subgrade type: Fine (non-active, swelling, frost-susceptible), coarse Pavement structure: Flexible (4 inches AC on 8 inches AGG, 7 inches AC on 12 inches AGG) Rigid (8 inches JPCP on 6 inches AGG, 11 inches JPCP on 6 inches AGG)
SPS-9: Asphalt Specifications and Mix Design	Asphalt mix: State mixture design, SHRP mixture design and analysis system, Stone matrix asphalt (optional)

Legend
AGG = Dense-graded aggregate base.
ATB = Asphalt-treated base.
PATB = Permeable asphalt-treated base.
LCB = Lean concrete base.
JPCP = Jointed plain concrete pavement.
JRCP = Jointed reinforced concrete pavement.
CPR = Concrete pavement restoration.
CRCP = Continuously reinforced concrete pavement.
AC = Asphalt concrete.

To assist the highway agencies in nominating test sites for the SPS experiments, guidelines for nomination and evaluation of candidate projects were developed for each experiment. These guidelines outline project selection criteria and participation requirements and include project nomination forms and instructions. The project selection criteria detail the specific requirements for the test site and its desired characteristics. Participation requirements outline the responsibilities of the participating agency concerning construction, testing, monitoring, and other related activities. The nomination forms completed by the participating agency provide detailed information on the proposed project to help assess its suitability for the experiment. To encourage participation, SHRP staff and contractors participated in several meetings to discuss the details and objectives of the SPS program. Based on the results of a review of the project records and a field verification visit, the suitability of each proposed site was assessed and the nominating agency was notified of the findings.

Controlling construction uniformity at all test sites and thus reducing the influence of construction variability on test results is essential to the success of the SPS program. To achieve this goal, guidelines were developed for each experiment to help the participating highway agencies develop acceptable construction plans for the test sections. The guidelines address the experimental levels that must be included in the test site, the primary construction features and details that must be incorporated in the test sections, specifications for construction materials and details required for the test sections, typical cross sections and details, construction operations, and other pertinent considerations.

To help evaluate the performance of the different pavement structures constructed as part of the SPS program, data are collected from each test section and test site. These data relate to inventory and construction, materials and laboratory tests, traffic, distress profile, deflection, friction, climate, maintenance, and rehabilitation. Procedures for data collection and reporting were developed to ensure uniform and consistent data collection.

To encourage in-pavement instrumentation of test sections for the experiments on structural factors and environmental effects, a plan for instrumentation was developed to ensure that this activity, if pursued, will be performed in an organized and consistent manner to allow appropriate interpretation and utilization of test data. The plan identifies measurement types, sensor locations, sampling frequencies, recommended levels of redundancy and replication, and the extent of instrumentation at each test site.

The entire SPS program requires over 300 test sites including nearly 1700 test sections. As of May 5, 1992, only 209 test sites had been identified. This is due to the fact that recruitment for the experiment on asphalt-aggregate mixture specifications, which requires 82 test sites, was postponed because of the schedule for delivery of the mixture test equipment and related training activities. The majority of test sites for SPS-9 will be projects scheduled for construction in 1994 and 1995. No additional sites are sought for the experiments on preventive maintenance effectiveness. However, additional sites are needed for the other experiments.

The SPS experiments will result in numerous products that can be grouped into three categories: general products, specific products, and other products. General products refers to the development of improved design equations, the evaluation of existing design procedures, and the development of predictive equations for performance measures. Specific products refers to the evaluation of effects of the specific design features incorporated into each experiment on pavement performance. Other products refers to those products developed to help achieve the primary goals of the program, such as new test methods, correlations between test methods, and the study of other features.

In summary, the SPS program is well under way. Monitoring activities are expected to continue for 15 to 20 years. Short-, medium-, and long-term products are anticipated and these products, in combination with the products of LTPP's General Pavement Studies, will contribute to the overall goal of increasing pavement life with better utilization of resources.

References

1. Strategic Highway Research Program Plans, Transportation Research Board, National Research Council, 1986.

2. AASHTO Guide for Design of Pavement Structure, American Association of State Highway and Transportation Officials, 1986.

3. Asphalt Concrete Mix Design and Field Control, FHWA Technical Advisory T5040.27, Federal Highway Administration, 1988.

4. Mix Design Methods for Asphalt Concrete and Other Hot-Mix Types, Manual MS-2, The Asphalt Institute, 1988.

5. Guide Specifications for Highway Construction, American Association of State Highway and Transportation Officials, 1988.

6. Test and Evaluation Project No. 18, Stone Mastic Asphalt (SMA), Federal Highway Administration, 1991.

7. SHRP Distress Identification Manual for the Long-Term Pavement Performance Studies, Strategic Highway Research Program, 1990.

8. Instrumentation for Flexible Pavements, Report No. FHWA-RD-89-084, Federal Highway Administration, 1989.

9. Proceedings of the Symposium on State of the Art of Pavement Reponse Monitoring Systems for Roads and Airfields, Organization of Economic Cooperation and Development, 1989.

Bibliography

Specific Pavement Studies: Experimental Design and Research Plan for Experiment SPS-1, Strategic Study of Structural Factors for Flexible Pavements, February 1990.

Specific Pavement Studies: Experimental Design and Research Plan for Experiment SPS-2, Strategic Study of Structural Factors for Rigid Pavements, April 1990.

Development of a Procedure to Rate the Application of Pavement Maintenance Treatments, report no. Strategic Highway Research Program, Washington, DC, 1992.

Specific Pavement Studies: Experimental Design and Research Plan for Experiment SPS-5, Rehabilitation of Asphalt Concrete Pavements, April 1989.

Specific Pavement Studies: Experimental Design and Research Plan for Experiment SPS-6, Rehabilitation of Jointed Portland Cement Concrete Pavements, April 1989.

Specific Pavement Studies: Experimental Design and Research Plan for Experiment SPS-7, Bonded Portland Cement Concrete Overlays, February 1990.

Specific Pavement Studies: Experimental Design and Research Plan for Experiment SPS-8, Study of Environmental Effects in the Absence of Heavy Loads, August 1991.

Specific Pavement Studies: Experimental Design and Research Plan for Experiment SPS-9, Validation of SHRP Asphalt Specifications and Mix Design and Innovations in Asphalt Pavements, February 1992.

Specific Pavement Studies: Experimental Design and Participation Requirements, Operational Memorandum No. SHRP-LTPP-OM-005R, July 1990.

Specific Pavement Studies: Guidelines for Nomination and Evaluation of Candidate Projects for Experiment SPS-1, Strategic Study of Structural Factors for Flexible Pavements, Operational Memorandum No. SHRP-LTPP-OM-008, February 1990.

Specific Pavement Studies: Guidelines for Nomination and Evaluation of Candidate Projects for Experiment SPS-2, Strategic Study of Structural Factors for Rigid Pavements, Operational Memorandum No. SHRP-LTPP-OM-009, April 1990.

Specific Pavement Studies: Guidelines for Nomination and Evaluation of Candidate Projects for Experiment SPS-5, Rehabilitation of Asphalt Concrete Pavements, Operational Memorandum No. SHRP-LTPP-OM-006, November 1989.

Specific Pavement Studies: Guidelines for Nomination and Evaluation of Candidate Projects for Experiment SPS-6, Rehabilitation of Jointed Portland Cement Concrete Pavements, Operational Memorandum No. SHRP-LTPP-OM-007, November 1989.

Specific Pavement Studies: Guidelines for Nomination and Evaluation of Candidate Projects for Experiment SPS-7, Bonded Portland Cement Concrete Overlays, Operational Memorandum No. SHRP-LTPP-OM-011, June 1990.

Specific Pavement Studies: Guidelines for Nomination and Evaluation of Candidate Projects for Experiment SPS-8, Study of Environmental Effects in the Absence of Heavy Loads, Operational Memorandum No. SHRP-LTPP-OM-025, August 1991.

Specific Pavement Studies: Guidelines for Nomination and Evaluation of Candidate Projects for Experiment SPS-9, Validation of SHRP Asphalt Specifications and Mix Design and Innovations in Asphalt Pavements, Operational Memorandum No. SHRP-LTPP-OM-027, February 1992.

Specific Pavement Studies: Construction Guidelines for Experiment SPS-1, Strategic Study of Structural Factors for Flexible Pavements, Operational Memorandum No. SHRP-LTPP-OM-017, December 1990.

Specific Pavement Studies: Construction Guidelines for Experiment SPS-2, Strategic Study of Structural Factors for Rigid Pavements, Operational Memorandum No. SHRP-LTPPOM-018, December 1990.

Specific Pavement Studies: Construction Guidelines for Experiment SPS-5, Rehabilitation of Asphalt Concrete Pavements, Operational Memorandum No. SHRP-LTPP-OM-012, June 1990.

Specific Pavement Studies: Construction Guidelines for Experiment SPS-6, Rehabilitation of Jointed Portland Cement Concrete Pavements, Operational Memorandum No. SHRP-LTPP-OM-013, July 1990.

Specific Pavement Studies: Construction Guidelines for Experiment SPS-7, Bonded Portland Cement Concrete Overlays, Operational Memorandum No. SHRP-LTPP-OM-016, December 1990.

Specific Pavement Studies: Construction Guidelines for Experiment SPS-8, Study of Environmental Effects in the Absence of Heavy Loads, Operational Memorandum No. SHRP-LTPP-OM-029, March 1992.

Specific Pavement Studies: Construction Guidelines for Experiment SPS-9, Validation of SHRP Asphalt Specifications and Mix Design and Innovations in Asphalt Pavements, Preliminary Report, March 1992.

Specific Pavement Studies: Materials Sampling and Testing Requirements for Experiment SPS-1, Strategic Study of Structural Factors for Flexible Pavements, Operational Memorandum No. SHRP-LTPP-OM-021, February 1991.

Specific Pavement Studies: Materials Sampling and Testing Requirements for Experiment SPS-2, Strategic Study of Structural Factors for Rigid Pavements, Operational Memorandum No. SHRP-LTPP-OM-022, April 1991.

Specific Pavement Studies: Materials Sampling and Testing Requirements for Experiment SPS-5, Rehabilitation of Asphalt Concrete Pavements, Operational Memorandum No. SHRP-LTPP-OM-014, October 1990

Specific Pavement Studies: Materials Sampling and Testing Requirements for Experiment SPS-6, Rehabilitation of Jointed Portland Cement Concrete Pavements, Operational Memorandum No. SHRP-LTPP-OM-019, January 1991.

Specific Pavement Studies: Materials Sampling and Testing Requirements for Experiment SPS-7, Bonded Portland Cement Concrete Overlays, Operational Memorandum No. SHRP-LTPP-OM-020, January 1991.

Specific Pavement Studies: Materials Sampling and Testing Requirements for Experiment SPS-8, Study of Environmental Effects in the Absence of Heavy Loads, Operational Memorandum No. SHRP-LTPP-OM-030, August 1992.

Specific Pavement Studies: Materials Sampling and Testing Requirements for Experiment SPS-9, Validation of SHRP Asphalt Specifications and Mix Design and Innovations in Asphalt Pavements, Preliminary Report, March 1992.

Climatic Data Collection Requirements for SPS Test Sites, Strategic Highway Research Program, May 1992.

Data Collection Guide for Long-Term Pavement Performance Studies, Operational Guide No. SHRP-LTPP-OG-001, January 1990.

SHRP-LTPP Interim Guide for Laboratory Material Handling and Testing, Operational Guide No. SHRP-LTPP-OG-004, February 1991.

SHRP-LTPP Guide for Field Materials Sampling, Testing, and Handling, Operational Guide No. SHRP-LTPP-OG-006, May 1990.

Superior Performance Pavement: SUPERPAVE, Draft Report, Strategic Highway Research Program, January 1992.

Specific Pavement Studies: Data Collection Guidelines for Experiment SPS-1, Strategic Study of Structural Factors for Flexible Pavements, Operational Memorandum No. SHRP-LTPP-OM-026, December 1991.

Specific Pavement Studies: Data Collection Guidelines for Experiment SPS-2, Strategic Study of Structural Factors for Rigid Pavements, Operational Memorandum No. SHRP--LTPP-OM-028, February 1992.

Specific Pavement Studies: Data Collection Guidelines for Experiment SPS-5, Rehabilitation of Asphalt Concrete Pavements, Operational Memorandum No. SHRP-LTPP-OM-015, October 1990.

Specific Pavement Studies: Data Collection Guidelines for Experiment SPS-6, Rehabilitation of Jointed Portland Cement Concrete Pavements, Operational Memorandum No. SHRP-LTFP-OM-023, May 1991.

Specific Pavement Studies: Data Collection Guidelines for Experiment SPS-7, Bonded Portland Cement Concrete Overlays, Operational Memorandum No. SHRP-LTPP-OM-024, July 1991.

Specific Pavement Studies: Data Collection Guidelines for Experiment SPS-8, Study of Environmental Effects in the Absence of Heavy Loads, Operational Memorandum No. SHRP-LTPP-OM-031, September 1992.