Minnesota (27)

BRAUN INTERTEC

Braun Intertec Pavement, Inc. SPS-9
1983 Sloan Place
St Paul, Minnesota 55117-2004
612-776-7522 Fax 776-7201

Engineers and Scientists Serving the Built and Natural Environments

June 10, 1993

Mr. Curt Eastlund
Minnesota DOT
Materials and Research Div
1400 Gervais Avenue
Maplewood, MN 55109

Dear Mr. Eastlund:

Enclosed is a copy of the drilling and sampling data sheets that were completed on the SPS-9 project. The project is located on Highway 169 southbound, approximately 4 miles south of Belle Plaine, Minnesota. The materials sampling and testing was conducted June 1-3, 1993. The sampling and testing was performed using Mn/DOT equipment and personnel.

As indicated previously, the laboratory testing, with the exception of the resilient modulus test, is to be performed or paid for by Mn/DOT.

The resilient modulus testing will be performed by a laboratory under contract by FHWA/LTPP. It is anticipated that this contract will not be inplace until the fall of 1993, or early 1994. The ten 3-inch thin wall samples should be stored in a vertical condition and in a controlled environment. After the contract is in place we will provide instructions for how and where to ship the samples for testing.

I am also including three publications that were submitted to us from FHWA/LTPP:

- guidelines for nomination and evaluation of candidate projects for experiment SPS-9
- Specific pavement studies, experimental design and research plan for experiment SPS-9
- materials sampling and testing plan for SPS-9.

All three publications are dated February 1993. These guidelines may be updated at a later date.

In the materials sampling and testing plan guide, Tables 1 and 2 indicate the tests required to be run on the subgrade and granular base soils.

SHRP REGION: NC

FIELD SET 1

STATE: MN

SHRP SECTION ID NUMBER: SPS-9
270903; 270902; 270910; 270909,
270901

EXPERIMENT NAME: SPS-9

HIGHWAY NUMBER: HWY 169 SB

DATE OF FIELD MATERIAL SAMPLING AND FIELD TESTING: 6-1-93 TO 6-3-93

SUBMITTING CONTRACTOR: MNDOT

TOTAL SHEETS, INCLUDING THIS COVER PAGE: 1 OF 30

BRAUN℠
INTERTEC

SPS-7
Hwy 109 [illegible] ABOUT 4 MILES
SOUTH OF [illegible]

MP87

GPS-277090 — 86+00.99 / 86+00.90

~~BG 55 MG55~~
BG 56 MG56 270903
BS 55 MS55 SECTION 4D

86+00.595 TP-1 TS 01 / TS 02
86+00.500

~~BG 57 MG57~~ 270902
BG 58 MG58 SECTION 4C
BS 56 MS56

86+00.095 TP-2 TS 03 / MP 86 / 04
86+00.00

~~BG 59 MG59~~ 270910
BG 60 MG60 SECTION 4B
BS 57 MS57

85+00.595 TP-3 05 / 06
85+00.50

~~BG 61 MG61~~ 270909
BG 62 MG62 SECTION 4A
BS 58 MS58 MILL AC

85+00.095 TP-4 MP 85 / ~~07~~ / ~~08~~
85+00.000

~~BG 63 MG63~~ 270901
CONTROL SECTION
BG 64 MG64
BS 59 MS59

84+00.645 TP-5 ~~09~~ / ~~10~~
84+00.55

MP 84

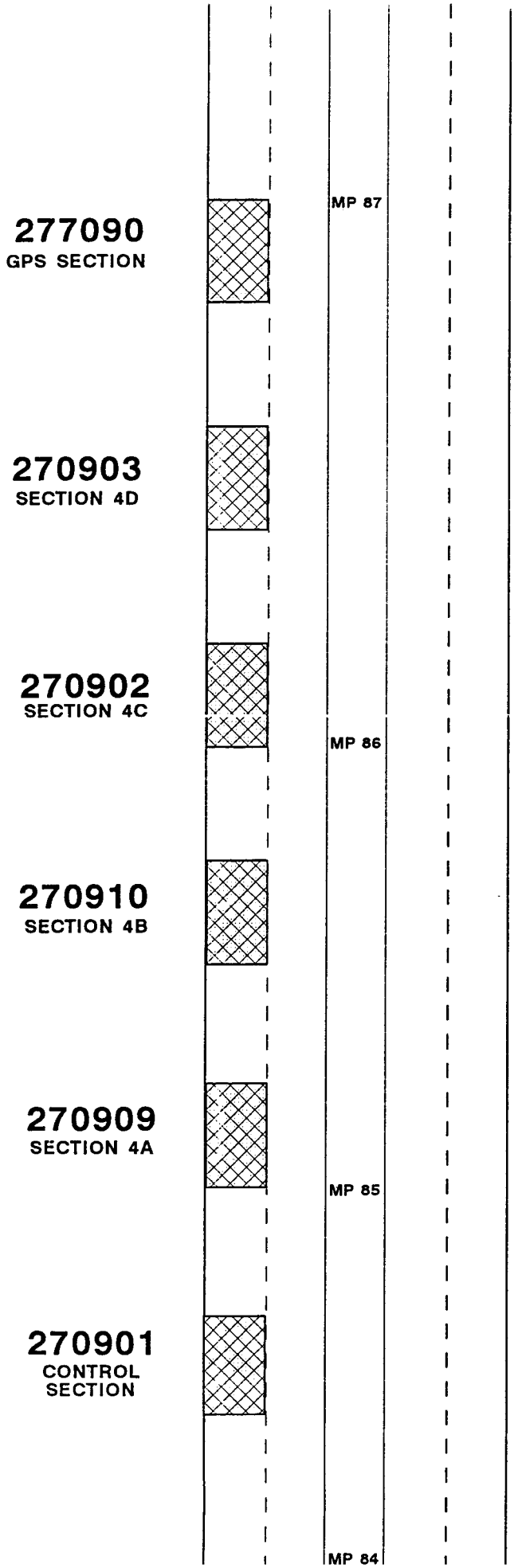

SPS-9
SOUTH OF BELLE PLAIN, MINNESOTA
US-169 SOUTH BOUND
AUGUST 1993

G:\USERS\SHP\MAPS\SPS\SPS9_MN

3 of 30

PRE-CONSTRUCTION SAMPLING AND TESTING

SPS-9
BELLE PLAINE, MN
US169 SOUTHBOUND

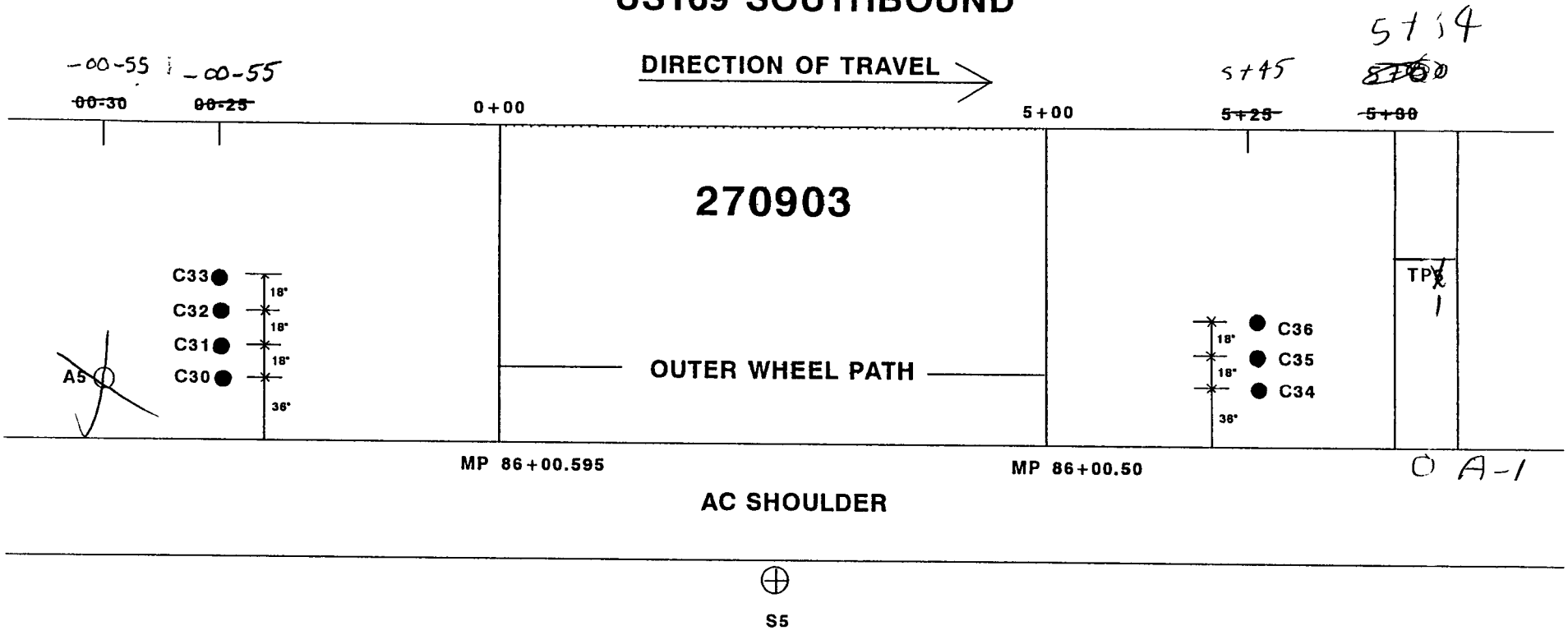

● 4" OD CORE OF SURFACE AND UNDERLAIN BOUND BASE.

○ 6" OD CORE OF SURFACE AND UNDERLAIN BOUND LAYER THIN-WALLED TUBE AND/OR SPLITSPOON SAMPLING 4' BELOW TOP OF SUBGRADE.

⊕ SHOULDER PROBE 20' BELOW TOP OF SHOULDER

▭ TEST PIT TO OBTAIN NUCLEAR DENSITY AND BULK SAMPLES.

PS903

SHEET 5 OF 19

POST

~~P~~ E-CONSTRUCTION SAMPLING AND TESTING

SPS-9
BELLE PLAINE, MN
US169 SOUTHBOUND

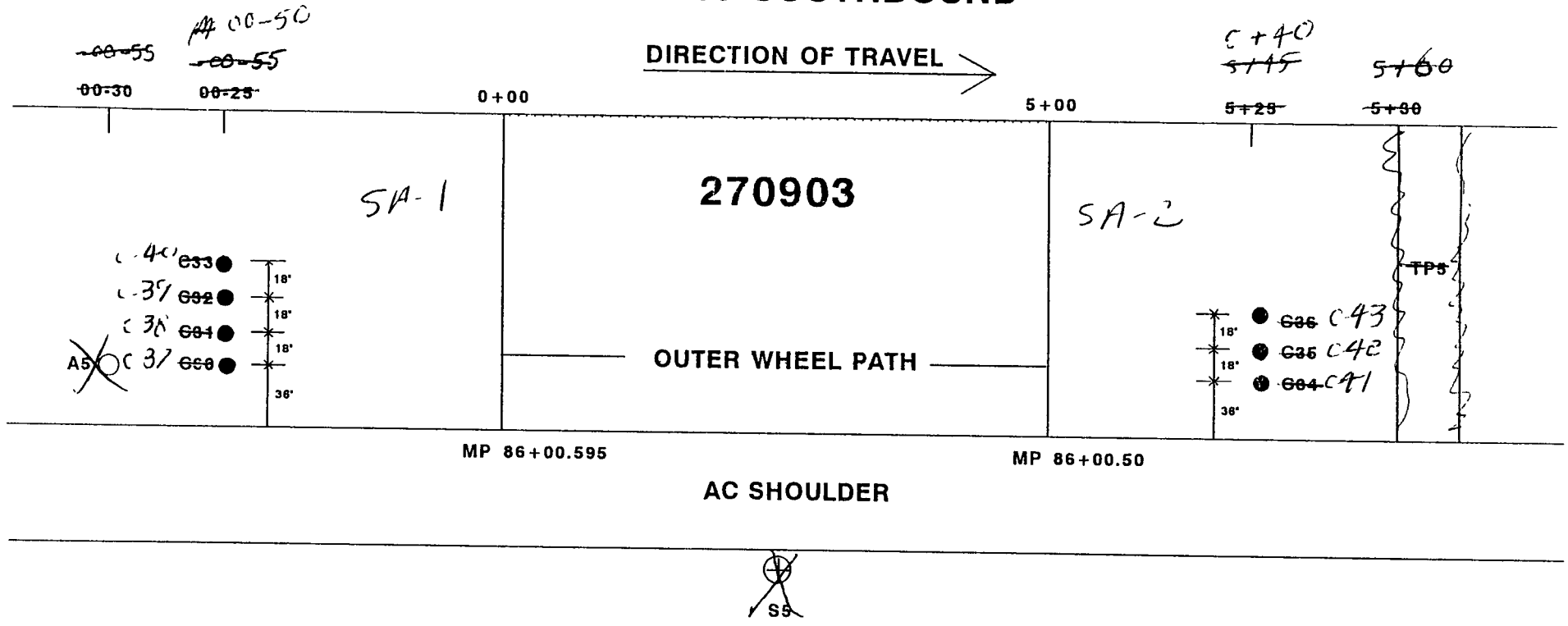

● 4" OD CORE OF SURFACE AND UNDERLAIN BOUND BASE.

~~6" OD CORE OF SURFACE AND UNDERLAIN BOUND LAYER THIN-WALLED TUBE AND/OR SPLITSPOON SAMPLING 4' BELOW TOP OF SUBGRADE.~~

~~SHOULDER PROBE 20' BELOW TOP OF SHOULDER~~

~~TEST PIT TO OBTAIN NUCLEAR DENSITY AND BULK SAMPLES.~~

M PS903

4 of 30

PRE-CONSTRUCTION SAMPLING AND TESTING

SPS-9
BELLE PLAINE, MN
US169 SOUTHBOUND

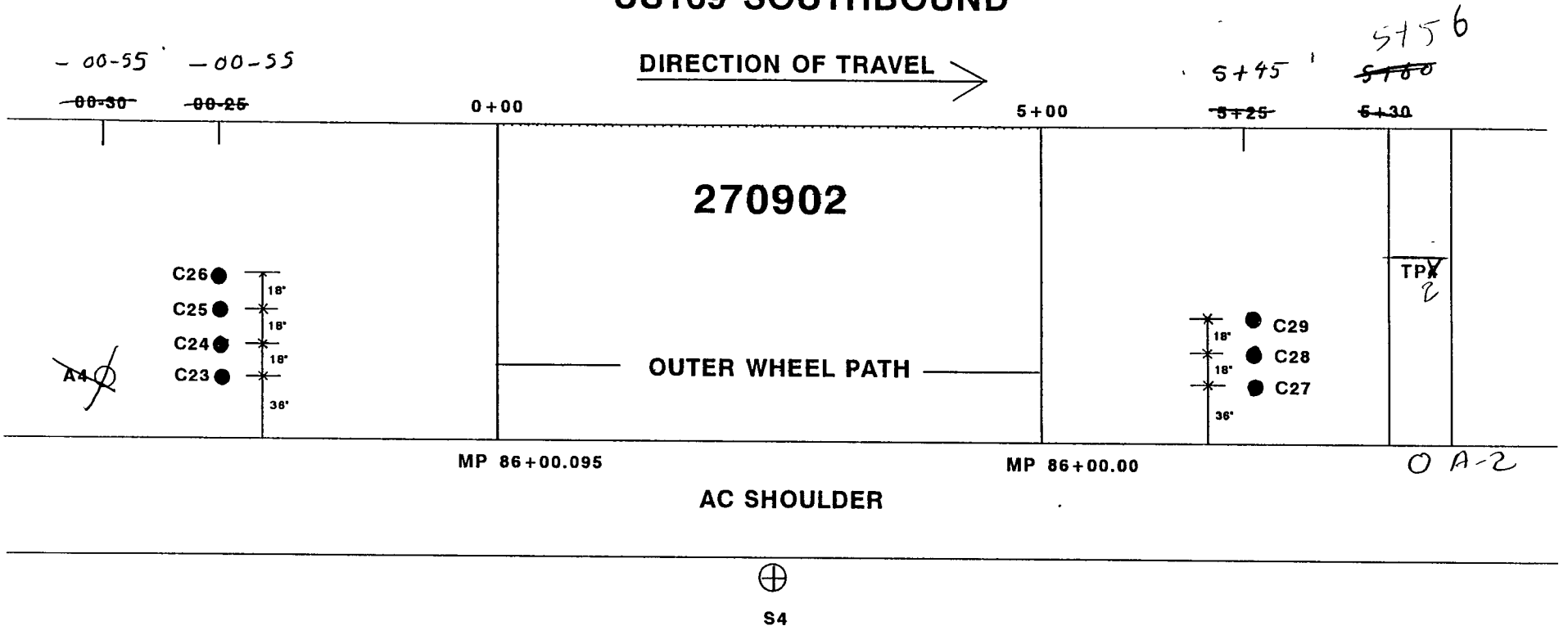

● 4" OD CORE OF SURFACE AND UNDERLAIN BOUND BASE.

○ 6" OD CORE OF SURFACE AND UNDERLAIN BOUND LAYER THIN-WALLED TUBE AND/OR SPLITSPOON SAMPLING 4' BELOW TOP OF SUBGRADE.

⊕ SHOULDER PROBE 20' BELOW TOP OF SHOULDER

▭ TEST PIT TO OBTAIN NUCLEAR DENSITY AND BULK SAMPLES.

N SPS902

POST

~~PRE~~-CONSTRUCTION SAMPLING AND TESTING

SPS-9
BELLE PLAINE, MN
US169 SOUTHBOUND

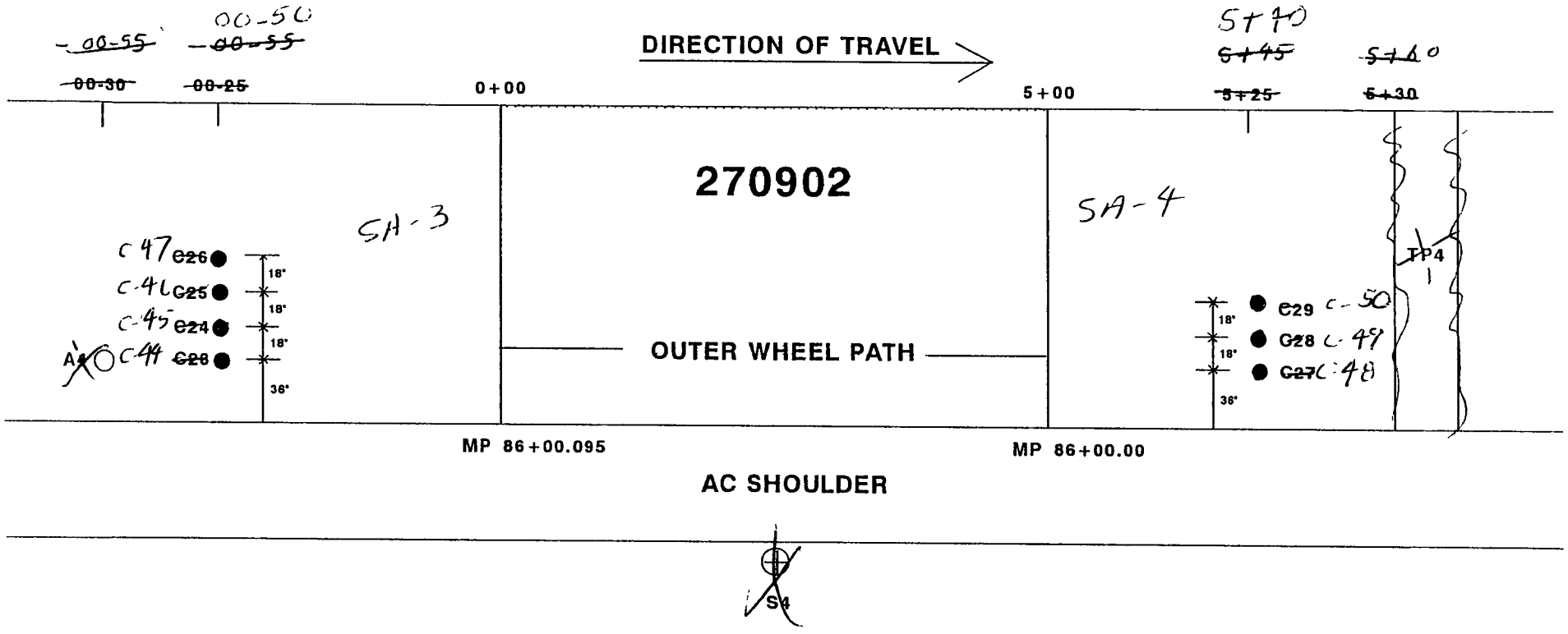

● 4" OD CORE OF SURFACE AND UNDERLAIN BOUND BASE.

~~6" OD CORE OF SURFACE AND UNDERLAIN BOUND LAYER THIN-WALLED TUBE AND/OR SPLITSPOON SAMPLING 4' BELOW TOP OF~~ SUBGRADE.

SHOULDER PROBE 20' BELOW TOP OF SHOULDER

TEST PIT TO OBTAIN NUCLEAR DENSITY AND BULK SAMPLES.

PS902

5 of 20

PRE-CONSTRUCTION SAMPLING AND TESTING

SPS-9
BELLE PLAINE, MN
US169 SOUTHBOUND

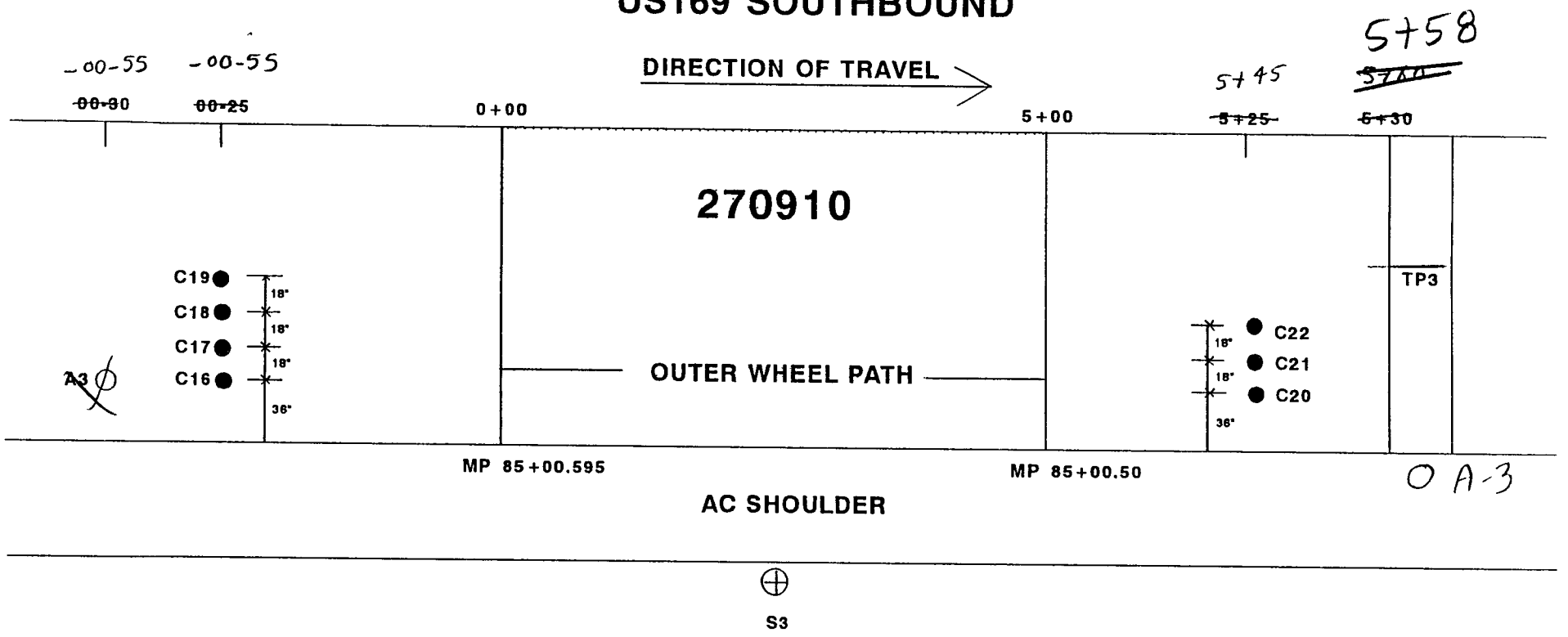

● 4" OD CORE OF SURFACE AND UNDERLAIN BOUND BASE.

○ 6" OD CORE OF SURFACE AND UNDERLAIN BOUND LAYER THIN-WALLED TUBE AND/OR SPLITSPOON SAMPLING 4' BELOW TOP OF SUBGRADE.

⊕ SHOULDER PROBE 20' BELOW TOP OF SHOULDER

▭ TEST PIT TO OBTAIN NUCLEAR DENSITY AND BULK SAMPLES.

MN/S910

SHEET 11 OF 19

POST

~~PRE-CONSTRUCTION~~ SAMPLING AND TESTING

SPS-9
BELLE PLAINE, MN
US169 SOUTHBOUND

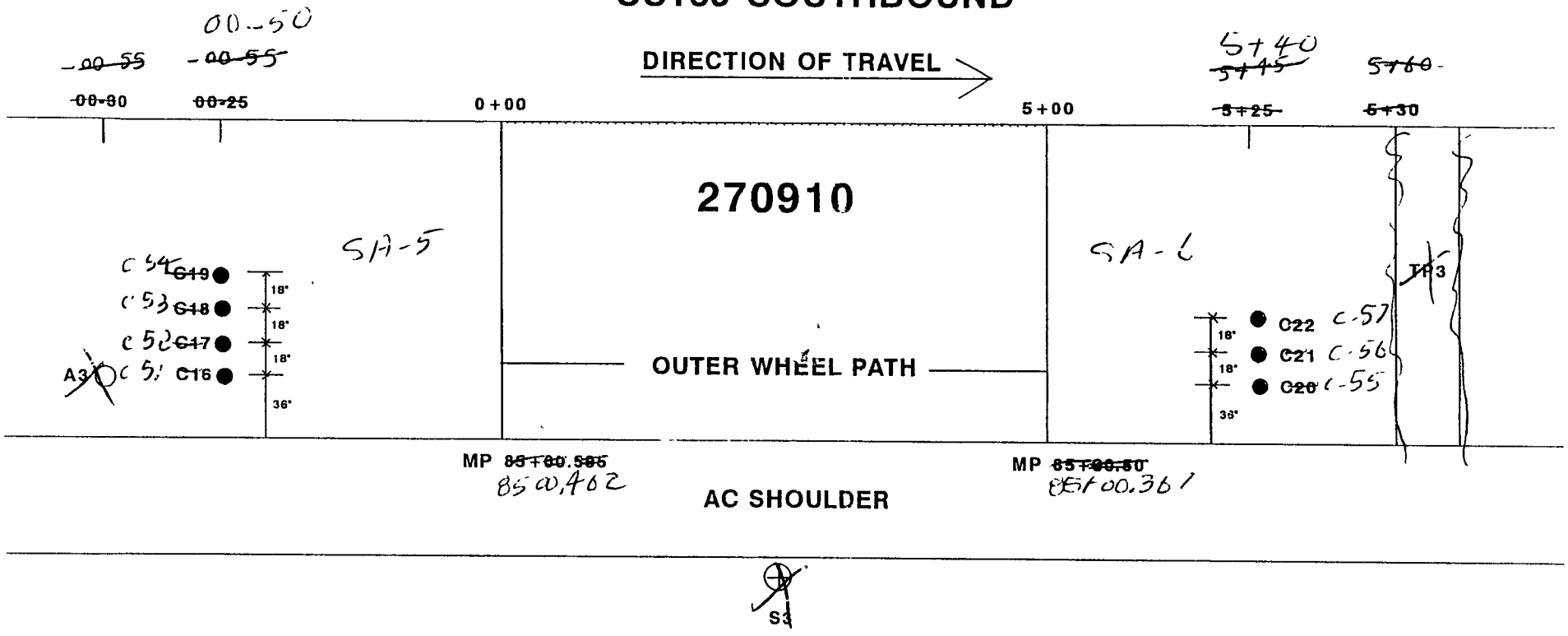

● 4" OD CORE OF SURFACE AND UNDERLAIN BOUND BASE.

~~6" OD CORE OF SURFACE AND UNDERLAIN BOUND LAYER~~
~~THIN-WALLED TUBE AND/OR SPLITSPOON SAMPLING 4' BELOW TOP OF~~
~~SUBGRADE.~~

~~SHOULDER PROBE 20' BELOW TOP OF SHOULDER~~

~~TEST PIT TO OBTAIN NUCLEAR DENSITY AND BULK SAMPLES.~~

SPS910

6 of 30

PRE-CONSTRUCTION SAMPLING AND TESTING

SPS-9
BELLE PLAINE, MN
US169 SOUTHBOUND

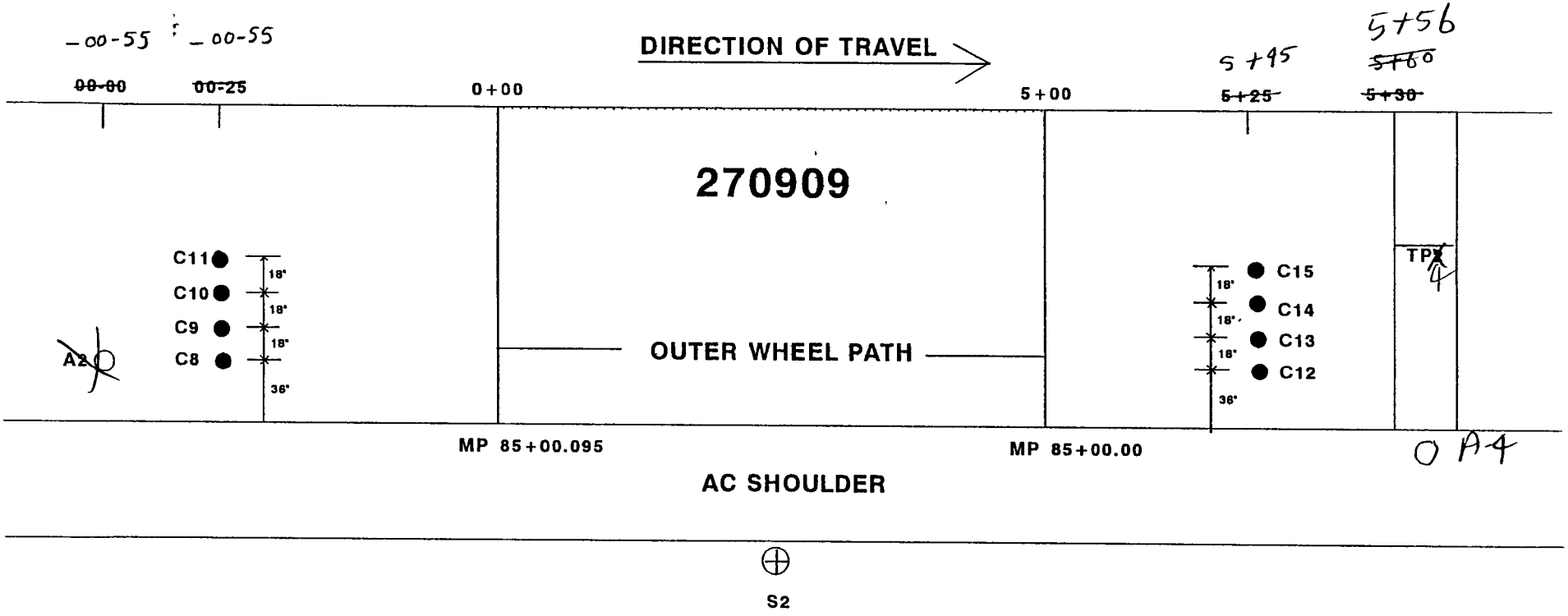

● 4" OD CORE OF SURFACE AND UNDERLAIN BOUND BASE.

○ 6" OD CORE OF SURFACE AND UNDERLAIN BOUND LAYER THIN-WALLED TUBE AND/OR SPLITSPOON SAMPLING 4' BELOW TOP OF SUBGRADE.

⊕ SHOULDER PROBE 20' BELOW TOP OF SHOULDER

▭ TEST PIT TO OBTAIN NUCLEAR DENSITY AND BULK SAMPLES.

SPS909

SHEET 14 of 19

POST

~~PRE~~-CONSTRUCTION SAMPLING AND TESTING

SPS-9
BELLE PLAINE, MN
US169 SOUTHBOUND

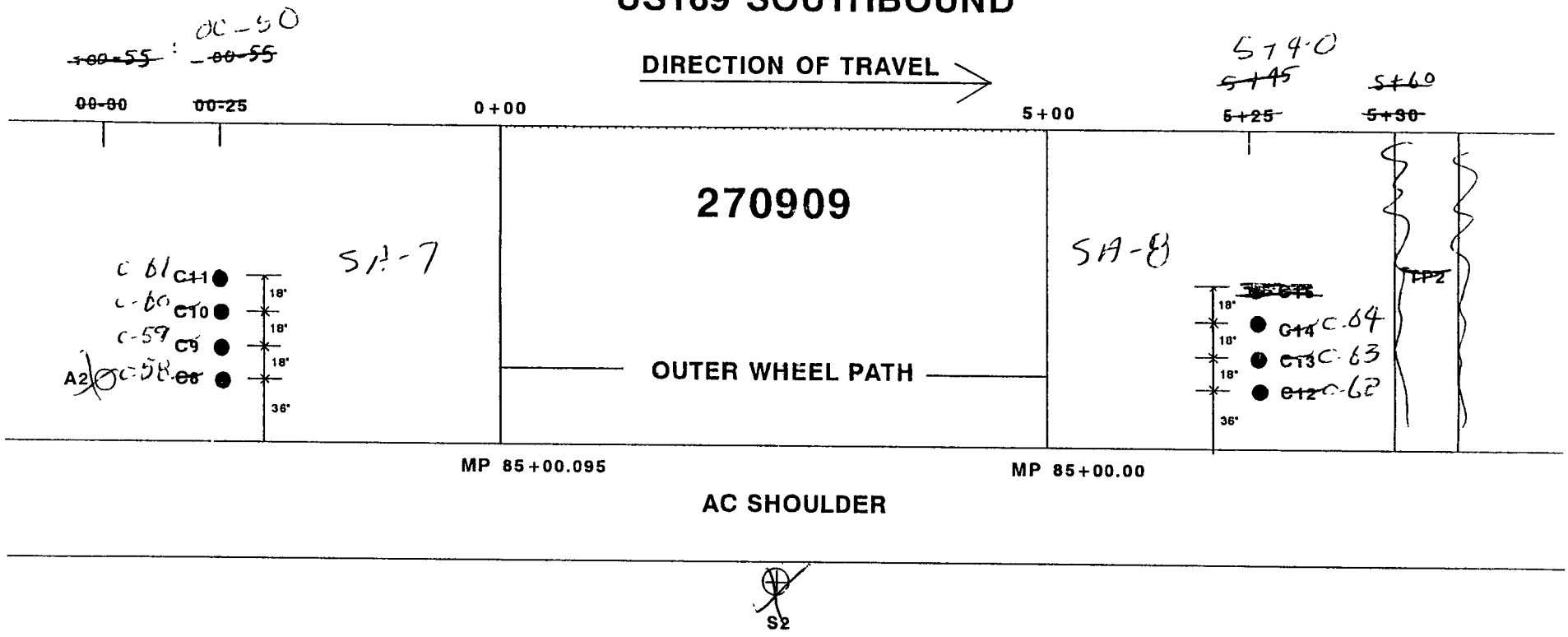

● 4" OD CORE OF SURFACE AND UNDERLAIN BOUND BASE.

~~6" OD CORE OF SURFACE AND UNDERLAIN BOUND LAYER~~
~~THIN-WALLED TUBE AND/OR SPLITSPOON SAMPLING 4" BELOW TOP OF SUBGRADE.~~

~~SHOULDER PROBE 20' BELOW TOP OF SHOULDER~~

~~TEST PIT TO OBTAIN NUCLEAR DENSITY AND BULK SAMPLES.~~

7 OF 30

PRE-CONSTRUCTION SAMPLING AND TESTING

SPS-9
BELLE PLAINE, MN
US169 SOUTHBOUND

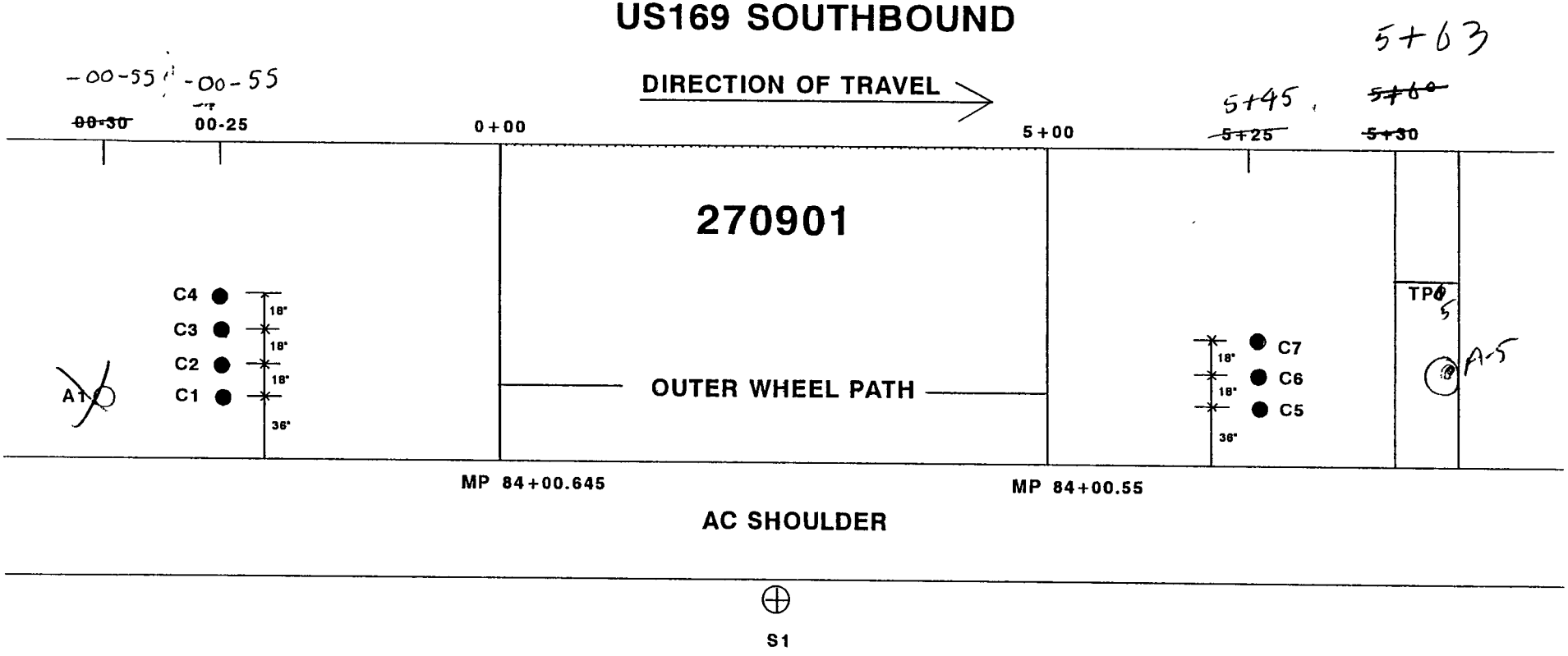

S1

● 4" OD CORE OF SURFACE AND UNDERLAIN BOUND BASE.

○ 6" OD CORE OF SURFACE AND UNDERLAIN BOUND LAYER THIN-WALLED TUBE AND/OR SPLITSPOON SAMPLING 4' BELOW TOP OF SUBGRADE.

⊕ SHOULDER PROBE 20' BELOW TOP OF SHOULDER

▭ TEST PIT TO OBTAIN NUCLEAR DENSITY AND BULK SAMPLES.

M. S901

SHEET 17 of 19

POST

PRE-CONSTRUCTION SAMPLING AND TESTING

SPS-9
BELLE PLAINE, MN
US169 SOUTHBOUND

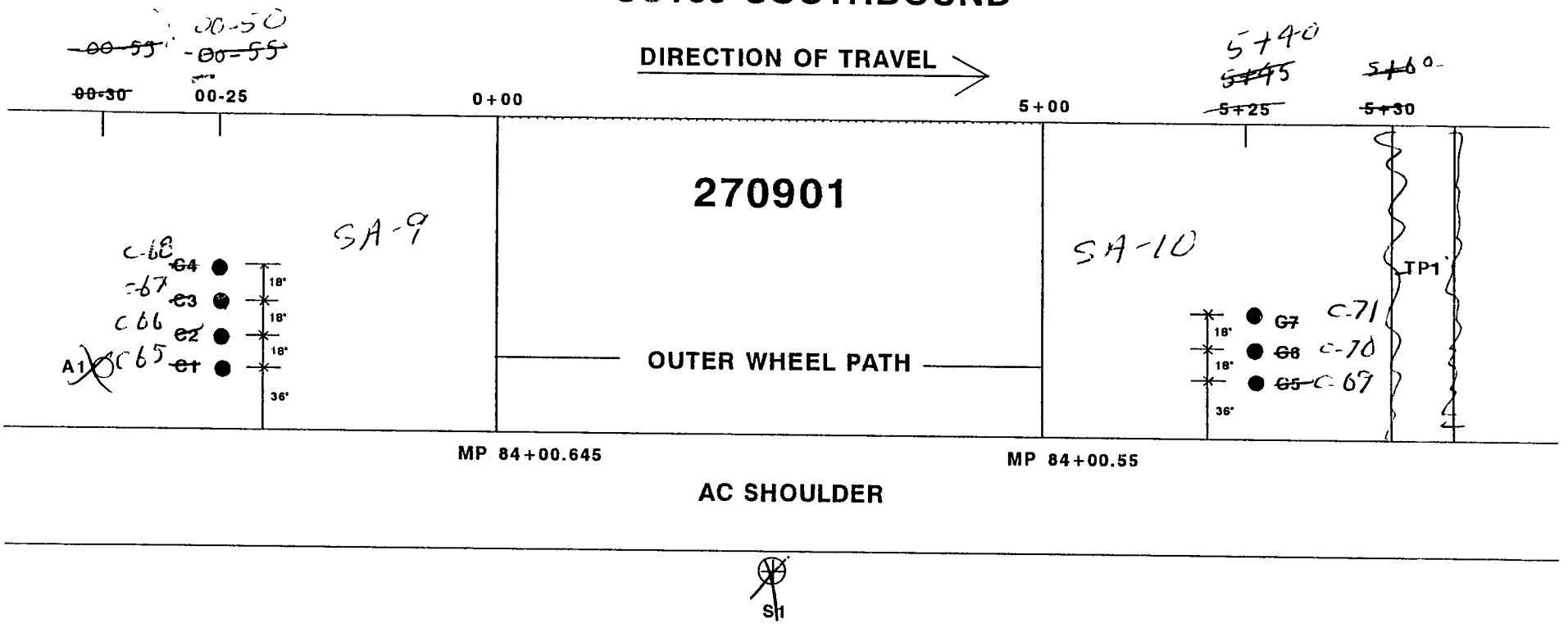

● 4" OD CORE OF SURFACE AND UNDERLAIN BOUND BASE.

~~6" OD CORE OF SURFACE AND UNDERLAIN BOUND LAYER~~
~~THIN-WALLED TUBE AND/OR SPLITSPOON SAMPLING 4' BELOW TOP OF~~
SUBGRADE.

~~SHOULDER PROBE 20' BELOW TOP OF SHOULDER~~

TEST PIT TO OBTAIN NUCLEAR DENSITY AND BULK SAMPLES.

SPS901

Table 11 - Samples to be Used for Laboratory Materials Testing

Material Type and Properties	LTPP Designation	LTPP Protocol	Minimum No. of Tests per Layer	Sampling Location	Test Conducted by: Agency	FHWA
SUBGRADE (when embankment ≥ 1.2 m [4 ft])						
No Testing						
SUBGRADE						
Sieve Analysis	SS01	P51	6	B1-B6		✓
Hydrometer to 0.001 mm	SS02	P42	6	B1-B6		✓
Atterberg Limits	SS03	P43	6	B1-B6		✓
Classification	SS04	P52	6	B1-B6		✓
(visual-manual only on thin-wall tubes)			18	A1-A18	✓	✓
Moisture-Density Relations	SS05	P55	6	B1-B6		✓
Resilient Modulus	SS07	P46	6	A2, A5, A9, A11, A14, A17		✓
(if thin-wall tube is not available)			6	B1-B6		✓
Unit Weight (if thin-wall tube is not available, test is not conducted)	SS08	P56	6	A1, A4, A8, A10, A13, A16	✓	
Natural Moisture Content	SS09	P49	6	B1-B6		✓
Unconfined Comp. Strength (if thin-wall tube is not available, test is not conducted)	SS10	P54	6	A1, A4, A8, A10, A13, A16	✓	
Permeability	SS11	P57	3	A3, A7, A18	✓	
Permeability	UG09	P48	6	B1-B6	✓	
EMBANKMENT < 1.2 m (4 ft) Thick						
Sieve Analysis	SS01	P51	6	B7-B12		✓
Hydrometer to 0.001 mm	SS02	P42	6	B7-B12		✓
Atterberg Limits	SS03	P43	6	B7-B12		✓
Classification	SS04	P52	6	B7-B12		✓
Moisture-Density Relations	SS05	P55	6	B7-B12		✓
Resilient Modulus	SS07	P46	6	B7-B12		✓
Natural Moisture Content	SS09	P49	6	B7-B12		✓
Permeability	UG09	P48	6	B7-B12	✓	

Table 11 - Samples to be Used for Laboratory Materials Testing

Material Type and Properties	LTPP Designation	LTPP Protocol	Minimum No. of Tests per Layer	Sampling Location	Test Conducted by: Agency	FHWA
EMBANKMENT ≥ 1.2 m (4 ft) Thick						
Sieve Analysis	SS01	P51	6	B1-B6		✓
Hydrometer to 0.001 mm	SS02	P42	6	B1-B6		✓
Atterberg Limits	SS03	P43	6	B1-B6		✓
Classification	SS04	P52	6	B1-B6		✓
(visual-manual only on thin wall tube)			18	A1-A18	✓	✓
Moisture-Density Relations	SS05	P55	6	B1-B6		✓
Resilient Modulus	SS07	P46	6	A2, A5, A9, A11, A14, A17		✓
(if thin-wall tube is not available)			6	B1-B6		✓
Unit Weight (if thin-wall tube is not available, test is not conducted)	SS08	P56	6	A1, A4, A8, A10, A13, A16	✓	
Natural Moisture Content	SS09	P49	6	B1-B6		✓
Unconfined Comp. Strength (if thin-wall tube is not available, test is not conducted)	SS10	P54	6	A1, A4, A8, A10, A13, A16	✓	
Permeability	SS11	P57	3	A3, A7, A18	✓	
Permeability	UG09	P48	6	B1-B6	✓	
UNBOUND GRANULAR BASE						
Particle Size Analysis	UG01	P41	3	B13-B15		✓
Sieve Analysis (washed)	UG02	P41	3	B13-B15		✓
Atterberg Limits	UG04	P43	3	B13-B15		✓
Moisture-Density Relations	UG05	P44	3	B13-B15		✓
Resilient Modulus	UG07	P46	3	B13-B15		✓
Classification	UG08	P47	3	B13-B15		✓
Permeability	UG09	P48	3	B13-B15	✓	
Natural Moisture Content	UG10	P49	3	B13-B15		✓
PERMEABLE TREATED ASPHALT BASE						
Asphalt Content (Extraction)	AC04	P04	3	B16-B18 from paver	✓	
Extracted Aggregate:						
Gradation of Aggregate	AG04	P14	3	B16-B18 from paver	✓	

Table 11 - Samples to be Used for Laboratory Materials Testing

Material Type and Properties	LTPP Designation	LTPP Protocol	Minimum No. of Tests per Layer	Sampling Location	Test Conducted by: Agency	FHWA
ASPHALT TREATED BASE						
Core Examination/Thickness	AC01	P01	34	C1-C10, C21-C34, C47-C56	✓	✓
Bulk Specific Gravity	AC02	P02	34	C1-C10, C21-C34, C47-C56	✓	✓
Maximum Specific Gravity	AC03	P03	3	B19-B21 from paver	✓	
Asphalt Content (Extraction)	AC04	P04	3	B19-B21 from paver	✓	
Moisture Susceptibility	AC05	P05	3	B19-B21 from paver	✓	
Resilient Modulus	AC07	P07	9	C5-C7, C25-C27, C51-C53		✓
Tensile Strength	AC07	P07	12	C5-C8, C25-C28, C51-C54		✓
Extracted Aggregate:						
Specific Gravity:						
Coarse Aggregate	AG01	P11	3	B19-B21 from paver	✓	
Fine Aggregate	AG02	P12	3	B19-B21 from paver	✓	
Gradation of Aggregate	AG04	P14	3	B19-B21 from paver	✓	
NAA Test for Fine Aggregate	AG05	P14A	3	B19-B21 from paver	✓	
Particle Shape						
Asphalt Cement:						
Abson Recovery	AE01	P21	3	B19-B21 from paver	✓	
Penetration at 25°C, 46°C (77°F, 115°F)	AE02	P22	3	B19-B21 from paver	✓	
Specific Gravity 16°C (60°F)	AE03	P23	3	B19-B21 from paver	✓	
Viscosity at 25°C (77°F)	AE04	P24	3	B19-B21 from paver	✓	
Viscosity at 60°C, 135°C (140°F, 275°F)	AE05	P25	3	B19-B21 from paver	✓	
Asphalt Cement: (From Tanker or Plant)						
Penetration at 25°C, 46°C (77°F, 115°F)	AE02	P22	3	B22-B24 from plant	✓	
Specific Gravity 16°C (60°F)	AE03	P23	3	B22-B24 from plant	✓	
Viscosity at 25°C (77°F)	AE04	P24	3	B22-B24 from plant	✓	
Viscosity at 60°C, 135°C (140°F, 275°F)	AE05	P25	3	B22-B24 from plant	✓	

Table 11 - Samples to be Used for Laboratory Materials Testing

Material Type and Properties	LTPP Designation	LTPP Protocol	Minimum No. of Tests per Layer	Sampling Location	Test Conducted by: Agency	FHWA
ASPHALTIC CONCRETE SURFACE AND BINDER						
Core Examination/Thickness	AC01	P01	60	C1-C60	✓	✓
Bulk Specific Gravity	AC02	P02	60	C1-C60	✓	✓
Maximum Specific Gravity	AC03	P03	3	B25-B27 from paver	✓	
Asphalt Content (Extraction)	AC04	P04	3	B25-B27 from paver	✓	
Moisture Susceptibility	AC05	P05	3	B25-B27 from paver	✓	
Creep Compliance	AC06	P06	3	C3, C23, C47		✓
Resilient Modulus	AC07	P07	18	C5-C7, C15-C18, C25-C28, C35-C37, C41-C43, C51-C54		✓
Tensile Strength	AC07	P07	24	C5-C8, C15-C18, C25-C28, C35-C38, C41-C44, C51-C54		✓
Extracted Aggregate:						
Specific Gravity:						
Coarse Aggregate	AG01	P11	3	B25-B27 from paver	✓	
Fine Aggregate	AG02	P12	3	B25-B27 from paver	✓	
Gradation of Aggregate	AG04	P14	3	B25-B27 from paver	✓	
NAA Test for Fine Aggregate	AG05	P14A	3	B25-B27 from paver	✓	
Particle Shape						
Asphalt Cement:						
Abson Recovery	AE01	P21	3	B25-B27 from paver	✓	
Penetration at 25°C, 46°C (77°F, 115°F)	AE02	P22	3	B25-B27 from paver	✓	
Specific Gravity 16°C (60°F)	AE03	P23	3	B25-B27 from paver	✓	
Viscosity at 25°C (77°F)	AE04	P24	3	B25-B27 from paver	✓	
Viscosity at 60°C, 135°C (140°F, 275°F)	AE05	P25	3	B25-B27 from paver	✓	
Asphalt Cement: (From Tanker)						
Penetration at 25°C, 46°C (77°F, 115°F)	AE02	P22	3	B28-B30 from plant	✓	
Specific Gravity 16°C (60°F)	AE03	P23	3	B28-B30 from plant	✓	
Viscosity at 25°C (77°F)	AE04	P24	3	B28-B30 from plant	✓	
Viscosity at 60°C, 135°C (140°F, 275°F)	AE05	P25	3	B28-B30 from plant	✓	

MN SPS-9 HWY 169 SB
ABOUT 4 MILES SOUTH OF BELLE PLANE

270903 86+00.595 TO 86+00.500
SECTION 4D CRACK, SEAT, RESURFACE
1½" WEARE (SMA)
2½" BINDER
1½" LEVELING
> MNDOT MIX AGGEGATE AND AC

270902 86+00.095 TO 86+00.00
SECTION 4C CRACK. SEAT, RESURFACE
1½" WEAR
2½" BINDER
1½ LEVELING.
> ALL USING SHRP GRADED AGGREGATES AND MODIFIED ASPHALT CEMENT

270910 85+00.462 TO 85+00.367
SECTION 4B CRACK, SEAT, RESURFACE
1½" WEAR
2½" BINDER
1½ LEVELING
> ALL USING SHRP GRADED AGGREGATES PROJECT ASPHALT CEMENT

270909 85+00.095 TO 85+00.000
SECTION 4A MILL, CRACK, SEAT, RESURFACE
1½" WEAR PROJECT AGGREGATE MODIFIED ASPHALT CEMENT

2½ BINDER
1½ LEVELING
> PROJECT MIX AGGREGATE AND ASPHALT CEMENT

270901 84+00.645 TO 84+00.55
CONTROL

1½ WEAR
2½ BINDER
1½ LEVELING
> PROJECT MIX AGGREGATE AND ASPHALT CEMENT

Omni-Dex™
Color Coded Indexing System
Boorum & Pease™

ITEM	STOCK No.
5 TAB	20-0050
8 TAB	20-0080
10 TAB	20-0100
12 TAB	24120
15 TAB	24150

Esselte Pendaflex Corporation

Made in U.S.A.

Table 3

SPS-9 LABORATORY TESTING PLANS - ASPHALT MIXES FOR OVERLAY AND NEW/CONSTRUCTION

Material Type and Properties	SHRP Test	SHRP Protocol	Number of Tests	Samples
NEW ASPHALT CONCRETE				
Core Examination/Thickness	AC01	P01	21	C1-C21
Bulk Specific Gravity	AC02	P02	21	C1-C21
Maximum Specific Gravity	AC03	P03	3	BV1-BV3
Asphalt Content (Extraction)	AC04	P04	3	BV1-BV3
Moisture Susceptibility	AC05	P05	3	BV1-BV3
Creep Compliance	AC06	P06	3	BV1-BV3
Resilient Modulus	AC07	P07	3	C1-C12
Tensile Strength	AC07	P07		(FROM Mr)
AGGREGATES (Extracted from NEW Asphalt Concrete):				
Bulk Specific Gravity:				
Coarse Aggregate	AG01	P11	3	BV1-BV3
Fine Aggregate	AG02	P12	3	BV1-BV3
Type and Classification	AG03	P13	3	BV1-BV3
Gradation of Aggregate	AG04	P14	3	BV1-BV3
NAA Test for Fine Aggregate Particle Shape	AG05	P14A	3	BV1-BV3
Coarse Aggregate Particle Shape	AG06	P14B	3	BV1-BV3
ASPHALT CEMENT (Recovered from NEW Asphalt Concrete):				
Penetration at 50° F, 77°F, 90°F	AE02	P22	3	BV1-BV3
Specific Gravity (60°F)	AE03	P23	3	BV1-BV3
Viscosity at 77°F	AE04	P24	3	BV1-BV3
Viscosity at 140°F, 275°F	AE05	P25	3	BV1-BV3