SPS-1
Kansas (20

BRAUN
INTERTEC

Braun Intertec Pavement, Inc.
1983 Sloan Place
St Paul, Minnesota 55117-2004
612-776-7522 Fax 776-7201

Engineers and Scientists Serving the Built and Natural Environments

DATE: June 10, 1993

MEMO TO: Paul Gianakon, KDOT

FROM: Ann Johnson

RE: SPS-9 and 1 in Greensburg, Kansas
UPDATED Materials Sampling and Testing Plan

Attached are four copies of updated material sampling and testing plans for KDOT Supplementary sections on the SPS-1, and for the SPS-9 control section. Note that the changes that we discussed at our meeting Tuesday have been made. Please distribute these as you think necessary.

Ron Urbach will be on site Tuesday morning to assist with the subgrade sampling. Please call if you have any questions before that. I look forward to visiting again!

cc: Rodney, KDOT Topeka
Ron Urbach, Braun Intertec

SPS-1
EAST OF GREENSBURG, KANSAS
US-54 EAST BOUND
JUNE 1993

200162
STATE PROJECT
239+00-244-00

200163
STATE PROJECT
297+00-302+00

200164
STATE PROJECT
308+00-313+00

200159
STATE PROJECT
509+00-514+00

200101
7" AC
515+50-520+50

200102
4" AC
531+50-536+50

200106
7" AC
538+00-543+00

200107
4" AC
554+00-559+00

200108
7" AC
560+50-565+50

200109
7" AC
569+50-574+50

200110
7" AC
576+00-581+00

200112
4" AC
582+50-587+50

200111
4" AC
589+00-594+00

AT 598+00
PCC 596+00-600+00

200105
4" AC
611+50-616+50

200103
4" AC
622+00-627+00

200104
7" AC
628+50-633+50

200160
STATE PROJECT
735+00-740+00

200161
STATE PROJECT
787+00-792+00

NOT TO SCALE

SPS-9
EAST OF GREENSBURG,
KANSAS
US-54 EAST BOUND
JUNE 1993

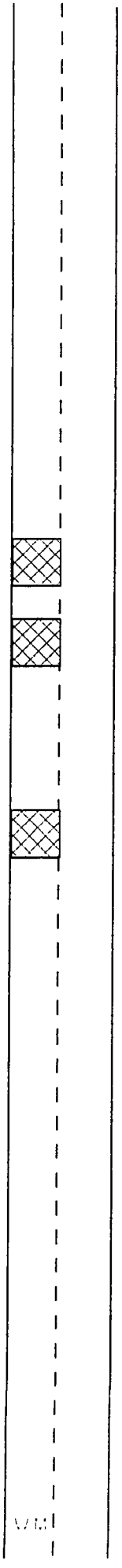

NOT TO SCALE

PRE-CONSTRUCTION SAMPLING AND TESTING

SPS-9
GREENSBURG, KS
US54 EASTBOUND

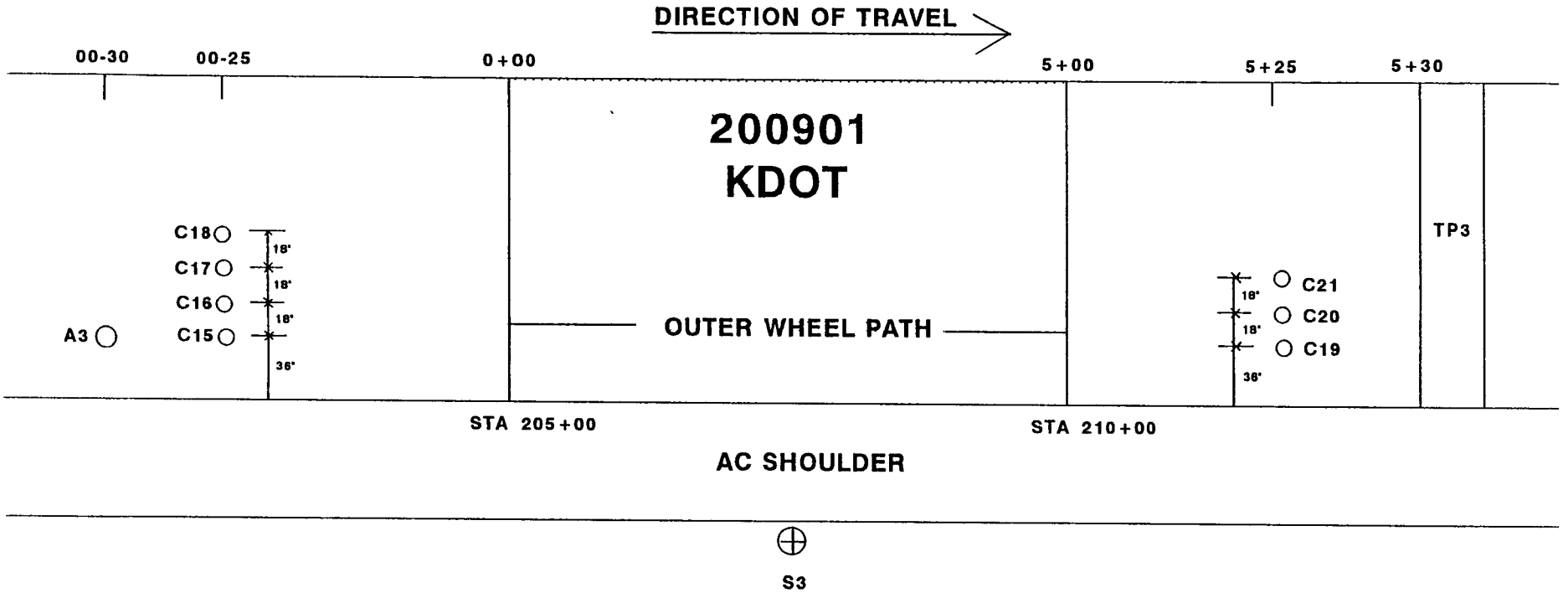

4" OD CORE OF SURFACE AND UNDERLAIN BOUND BASE.

6" OD CORE OF SURFACE AND UNDERLAIN BOUND LAYER
THIN-WALLED TUBE AND/OR SPLITSPOON SAMPLING 4' BELOW TOP OF SUBGRADE.

SHOULDER PROBE 20' BELOW TOP OF SHOULDER

TEST PIT TO OBTAIN NUCLEAR DENSITY AND BULK SAMPLES.

UPDATED
6/8/93

PRE-CONSTRUCTION SAMPLING AND TESTING

SPS-9
GREENSBURG, KS
US54 EASTBOUND

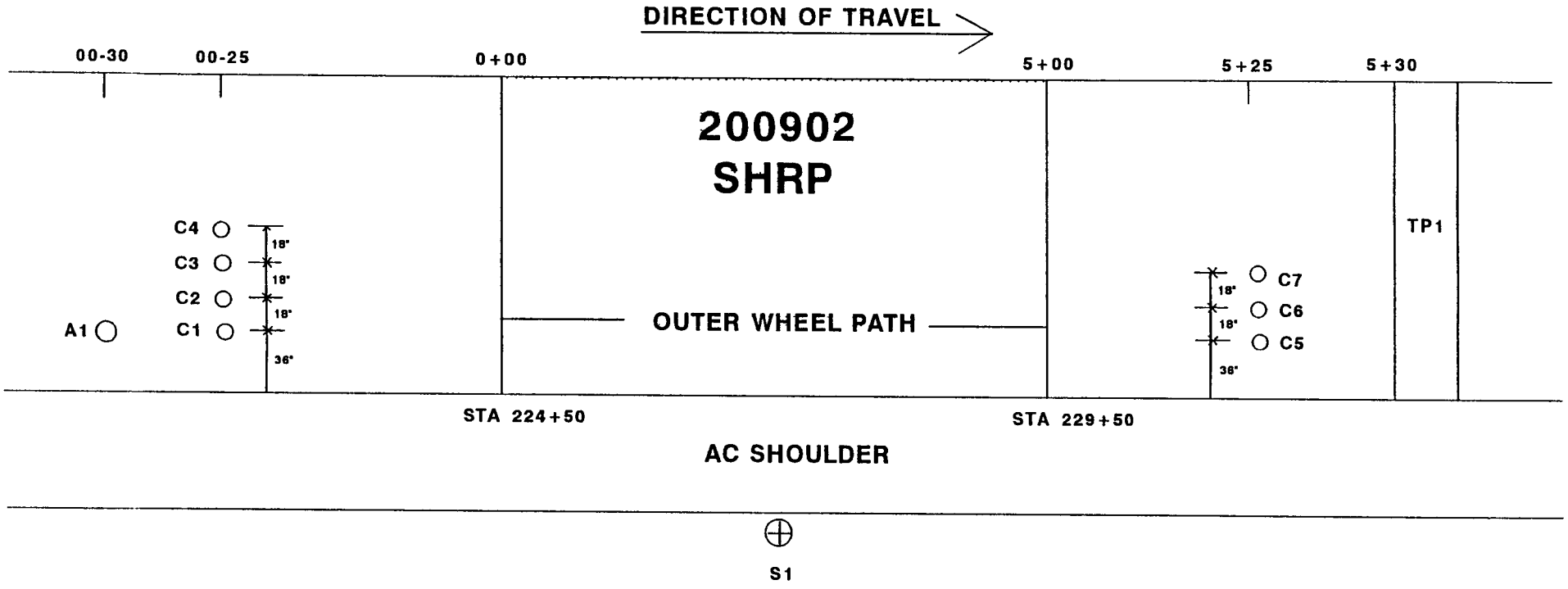

4" OD CORE OF SURFACE AND UNDERLAIN BOUND BASE.

6" OD CORE OF SURFACE AND UNDERLAIN BOUND LAYER
THIN-WALLED TUBE AND/OR SPLITSPOON SAMPLING 4' BELOW TOP OF SUBGRADE.

SHOULDER PROBE 20' BELOW TOP OF SHOULDER

TEST PIT TO OBTAIN NUCLEAR DENSITY AND BULK SAMPLES.

UPDATED
6/8/93

PRE-CONSTRUCTION SAMPLING AND TESTING

SPS-9
GREENSBURG, KS
US54 EASTBOUND

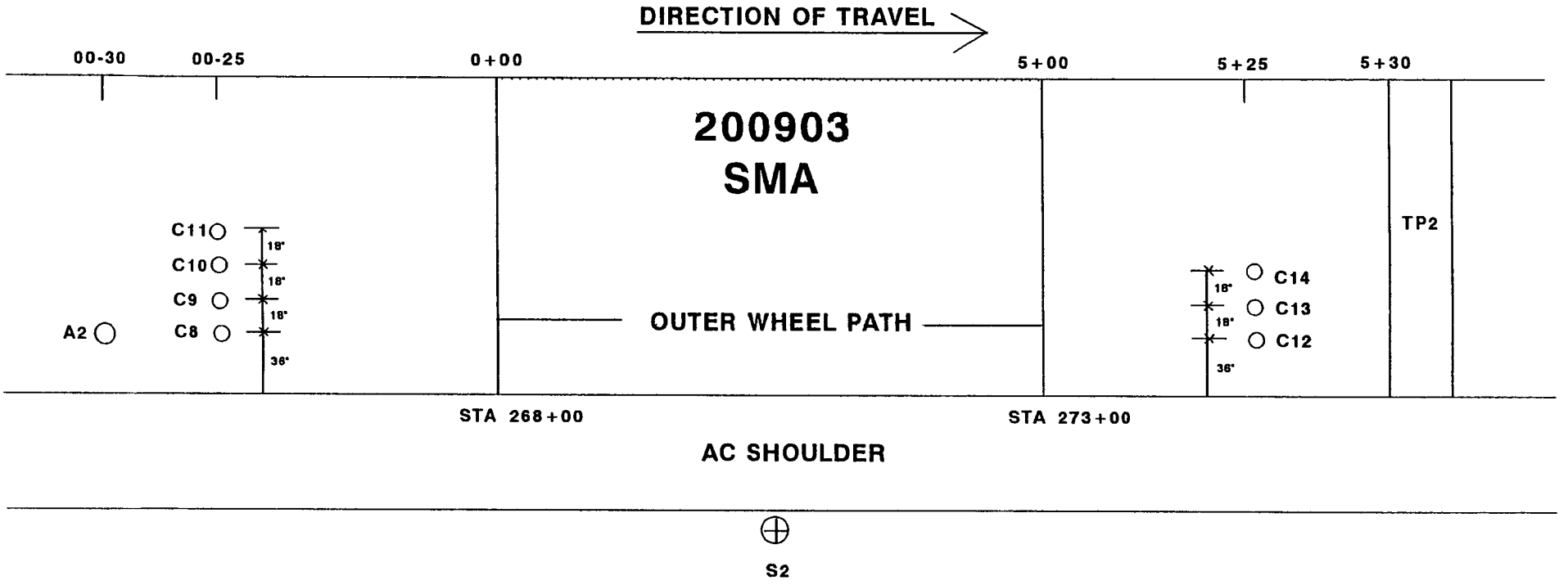

4" OD CORE OF SURFACE AND UNDERLAIN BOUND BASE.

6" OD CORE OF SURFACE AND UNDERLAIN BOUND LAYER
THIN-WALLED TUBE AND/OR SPLITSPOON SAMPLING 4' BELOW TOP OF SUBGRADE.

SHOULDER PROBE 20' BELOW TOP OF SHOULDER

TEST PIT TO OBTAIN NUCLEAR DENSITY AND BULK SAMPLES.

UPDATED 6/8/93

BRAUN
INTERTEC

SHRP SECTION 2001

KDOT SPECIAL TEST SECTION

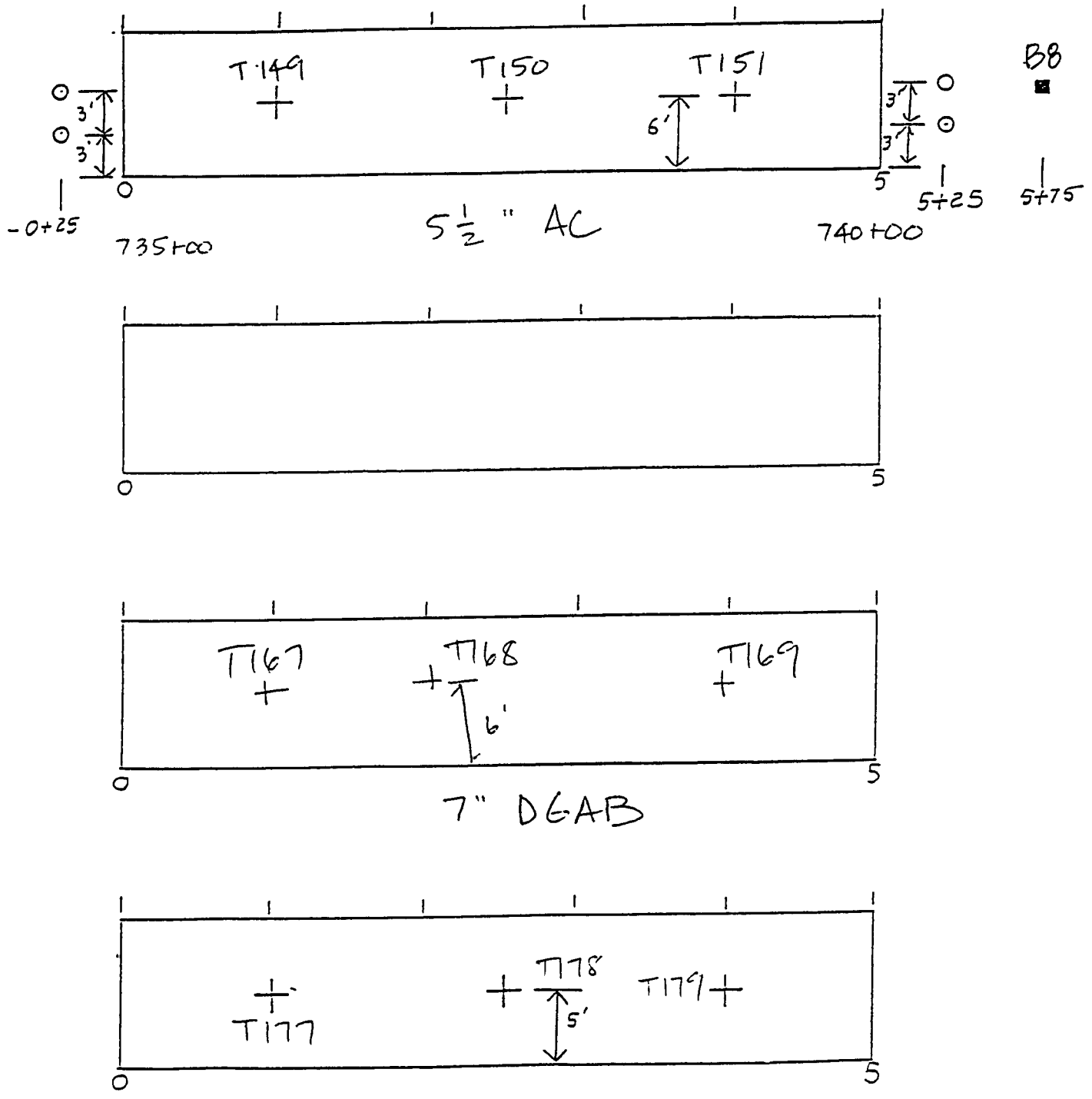

Updated 6/9/93

BRAUN INTERTEC

SHIP SECTION 200161
ICDOT SPECIAL TEST SECTION 2

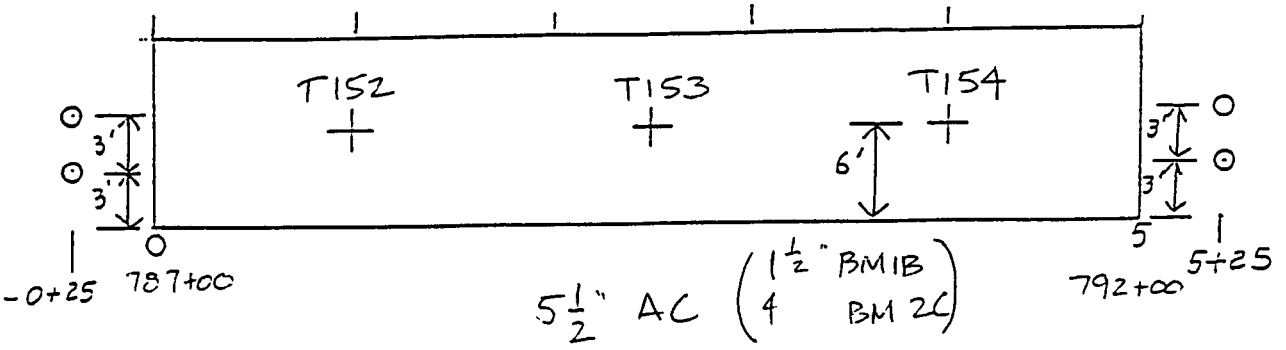

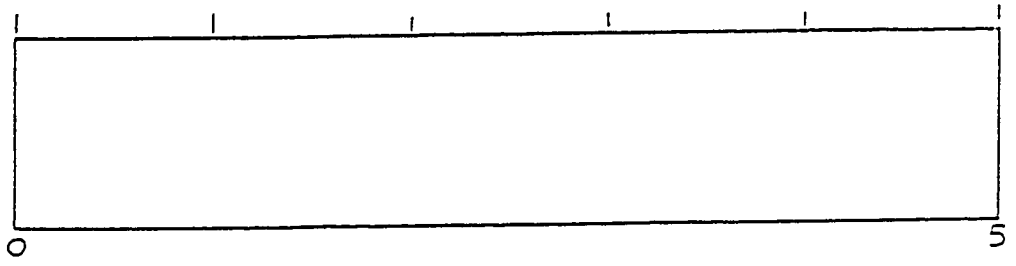

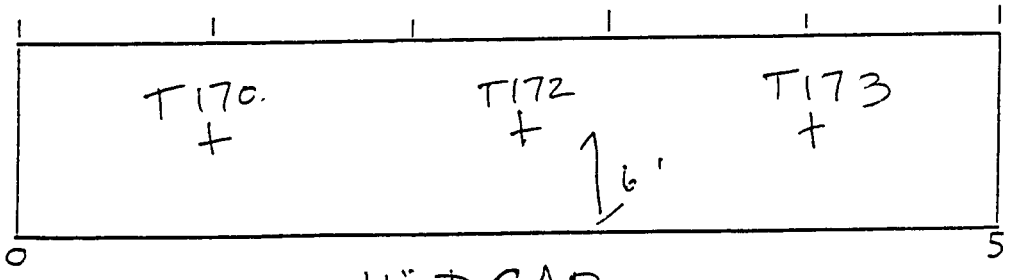

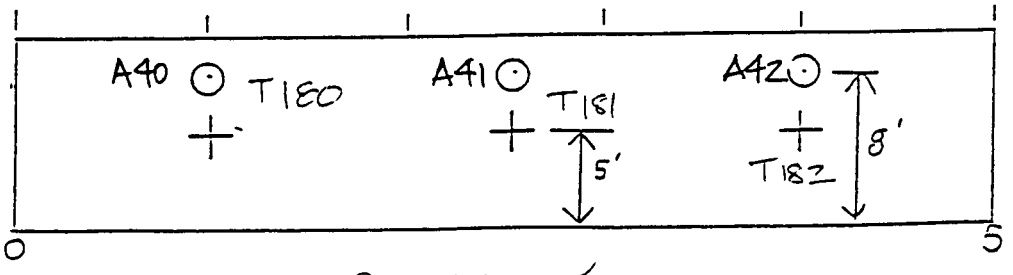

Updated 6/9/93

BRAUN INTERTEC

SHRP SECTION 2001.62

IDOT SPECIAL SECTION. 3

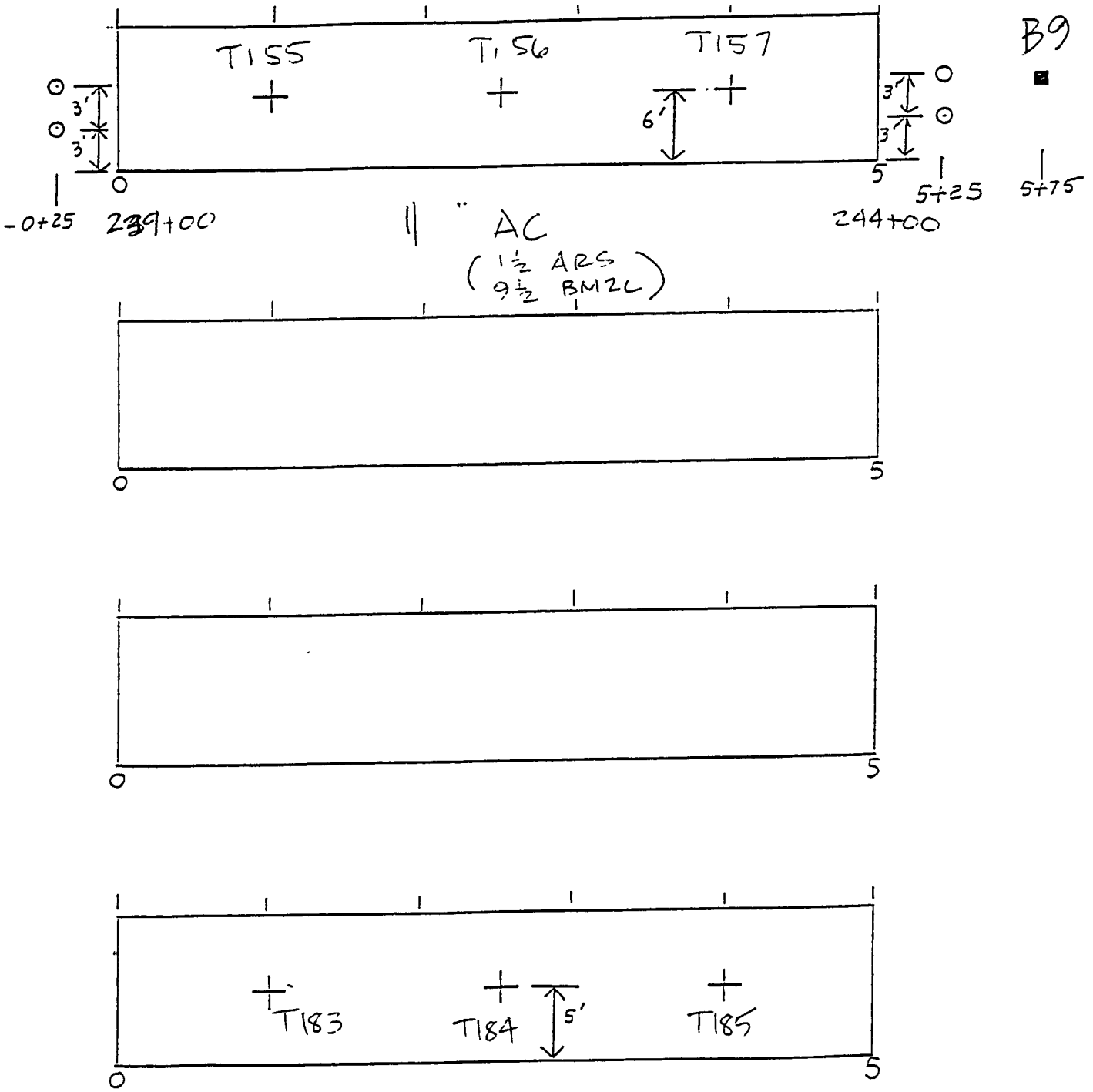

Updated 6/9/93

⊕ S16

BRAUN
INTERTEC

Shrp SECTION 200163
ICDOT SPECIAL SECTION 5

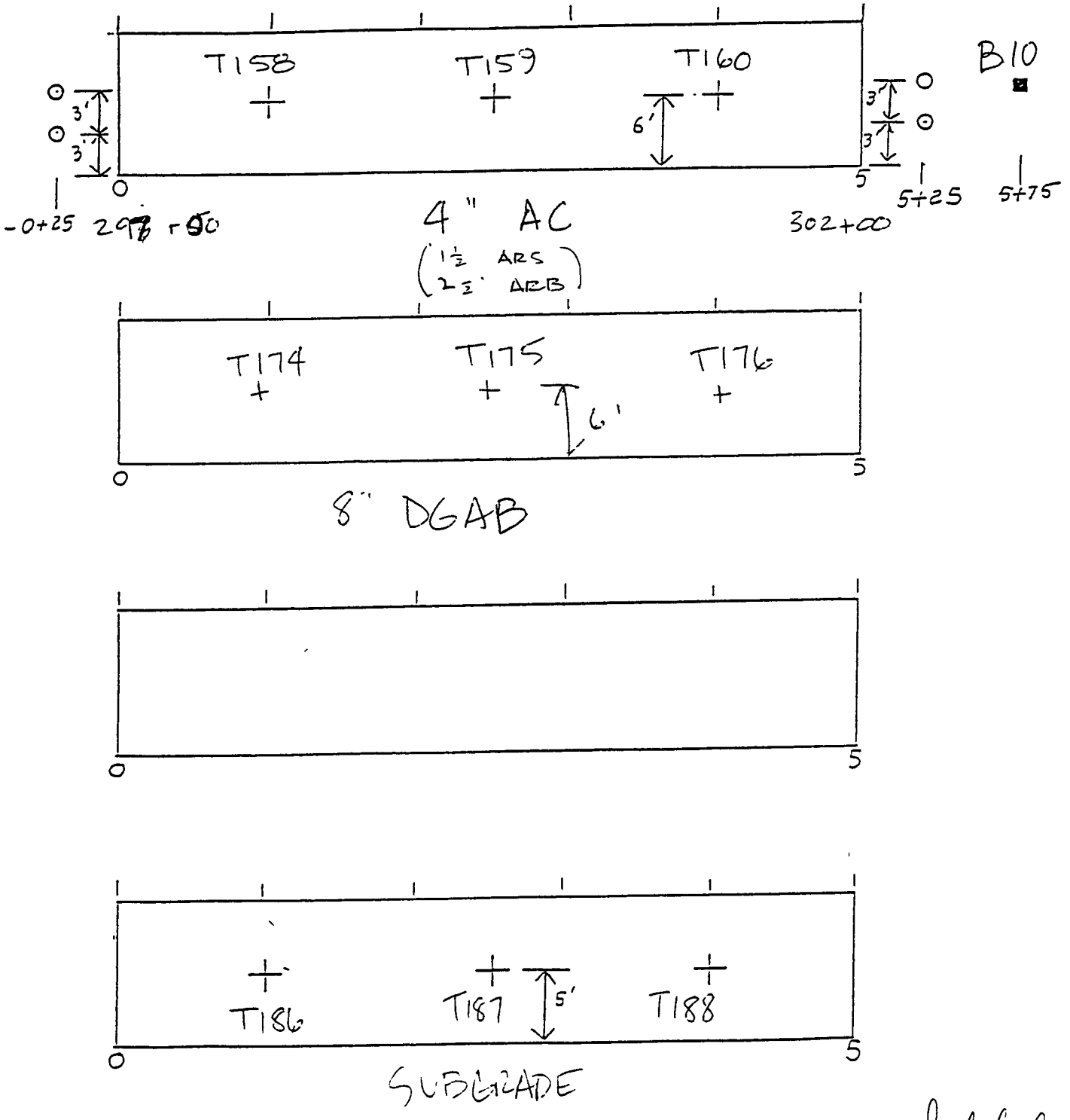

Updated
6/9/93

BRAUN INTERTEC

KDOT SPECIAL SECTION 6
SHRP SECTION 2001 LA

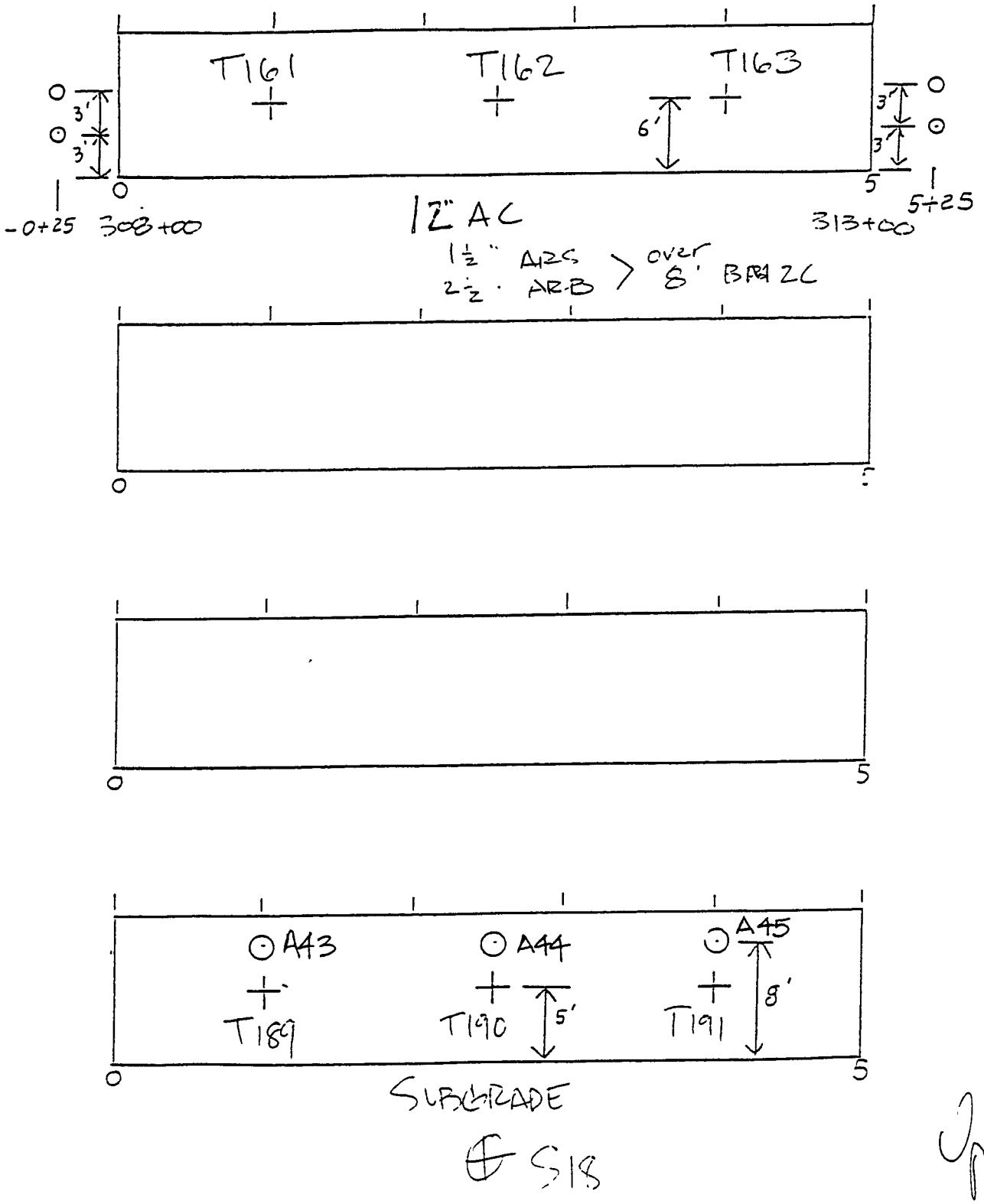

Updated 6/9/93